THIEL DUPLEX 158

UNIVERSAL TOOLROOM MILLING MACHINE

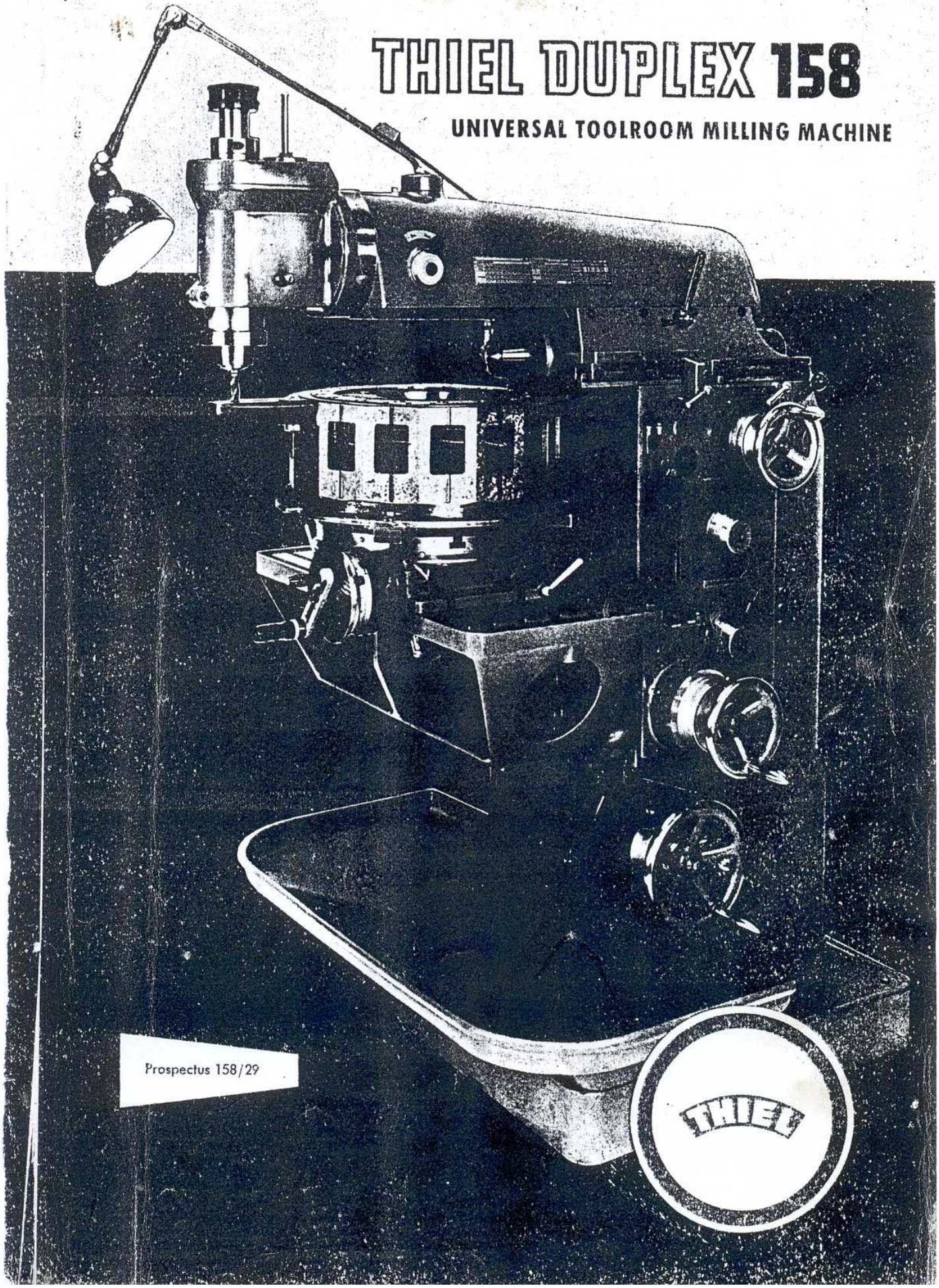

Prospectus 158/29

THIEL

A NATURAL DEVELOPMENT

THIEL DUPLEX 158

Thiel Toolroom machines originated in the demand of Thiel's own large watch factory. Machines were developed for home use and perfected from experience gained in the use of these machines.

Early in the century, the first "Punch Miller" was built (see illustration A). This was subsequently redesigned as a Duplex Miller (See Illustration B). Near perfection was reached in the early thirties when the Thiel Duplex 58 made its appearance. No single piece of equipment proved a greater value in the toolroom for the manufacture of punches, dies gauges, profiles, jugs and fixtures. Thousands of these machines have proved their value in all five Continents.

All these experiences culminate in the new THIEL DUPLEX 158 - an advanced design

still more versatile

still more precision

still more ease of operation.

This machine will certainly be the focal piece of equipment in any modern toolroom.

The experience collected over fifty years in the creation of the various models of toolroom machines, the skill of trained personnel are an assurance that the Thiel Duplex 158 is a supreme machine for the toolroom.

THIEL DUPLEX 158

the new toolroom machine of old tradition

VERSATILE
ACCURATE
HANDY . . .

These are essentials for a good tool and Punch Miller. The work carrying element as well as the tool require to have means of easy adjustment in relation to each other in all planes. The machine itself must be consistently accurate and must be easy to manipulate and set. Fulfillment of these conditions is a real measure of a toolroom machine. Very heavy stock removal and split second operations are not essential for such a tool.

The above conditions are fulfilled in the new THIEL DUPLEX 158. Based on its predecessors, this new machine incorporates various additional and novel features and the new "158" is generally more robust, has a greater working range, and at the same time is still easy to manipulate.

Some of the improvements are summarised as follows:

Motor and switch gear are built into machine and yet are easily accessible.

All gearboxes are inside the machine, the drive of spindle and feed are entirely independent of each other.

Mechanical and electrical safety elements are provided all-round and are easily accessible.

Fixed dowel positions for all attachment and tables etc., help the setting and ensure consistent accuracy.

Feed screws are hardened and ground.

Attachments of the new THIEL DUPLEX 158 will generally fit the earlier "58" model.

Cutting tools, collets and other equipment are identical for both type of machines.

THIEL DUPLEX 158

The modern toolroom miller of consistent precision

These new features of design simplify operation and increase versatility

Fig 1 & 2

illustrate the THIEL DUPLEX 158 as a jig boring machine. In the one case a comparatively large work piece showing the large gap of the vertical milling and drilling head mounted on the over-arm. This gap can be further increased by moving the headstock forward.
In the other case jig boring of a small component with the vertical head close to the column.

Illustration 3

clearly shows the solid support for the table with the inclined bearing surface of the horizontal and vertical slide. It will also be clearly seen that all operating elements are in easy reach on one side of the machine.

Illustration 4, 5 & 6

show the three outstanding features of the THIEL DUPLEX 158.

a) The Vertical Drilling and Milling Head (Att. 5) is mounted on the over-arm and has its drive inside the over-arm and is thus entirely independent of the horizontal spindle.

b) The position of the vertical spindle in relation to the horizontal spindle is such that the spindle nose of the vertical spindle is above the centre of the horizontal spindle, and thus a large distance between table and vertical spindle is obtainable.

c) The machine can simultaneously be set up for vertical or horizontal milling and both spindles can be used in sequence or in some cases simultaneously. The vertical head at all times remains on the over-arm. It can be moved forward or backwards with the over-arm. The same features apply to the slotting head (Att. 4)

. . . and here the equipment:

Fig. 7 – Attach. 5

Vertical Drilling and Milling head for Milling, Drilling, Reaming, Trepanning and Hand Slotting. It swivels 360°, has collet attachment interchangeable with horizontal spindle, is mounted on the over- arm and is independent of horizontal spindle. Same illustration shows attachment No.2, the parallel swivel vice which can be used in horizontal or vertical position, swivels 360° and is dowelled for zero position.

Fig. 8 – Attach. 1

Universal Dividing head for direct and indirect dividing, can be used horizontal or vertical, swivels through 360°, has collet attachment, outer steady, tailstock, faceplate and three dividing plates.

Fig. 9 – Attach. 3

Horizontal swivel table, swivels 10° either side

Fig. 10 – Attach. 6

Circular table for direct and indirect dividing. Outer steady for centring and milling of accurate radii. Index divided in minutes, top table has clamp.

Fig. 11 – Attach. 4

Universal Slotting Head with adjustable stroke, can be operated by power or by hand, swivels 360°, mounted on over-arm and driven through over-arm. Strokes cause no interference with main spindle bearings. Tool relieved on return stroke.

The versatility of this Universal toolroom Machine is assured by the large amount of standard equipment supplied with each machine.
All automatic feeds are provided with the automatic stops – fine measuring device with verniers – carrier slides with dial gauges for use of slip gauges.
The machine and attachments are dowelled to ensure exact zero position.
For both spindles – suitable centring attachments with dial gauges – precision offset boring head – 3-jaw chuck with back plate.
Other equipment includes electric light fitting and diagrams.

THIEL DUPLEX 158

the new toolroom miller of greater versatility

As additional equipment, we recommend a "THIEL" SET OF TOOLS which should be ordered with the machine. It represents a useful choice of cutting tools and collets selected from experience with this type of machine.

The THIEL TOOL SET comprises

6 Cutter Arbors	4 Slot Cutters
13 Collets	3 Ball Cutters
9 End Mills	3 Radius Cutters
2 Angular Cutters	4 Slitting Cutters
1 Face Cutter	2 circular Saws
4 Side and Face Cutters	

A detailed list will be sent on request.

The illustration on page 12 shows some of the tools and the manner in which they are arranged.

. . . and an additional plus the renowned

THIEL SERVICE!

It has always been our practice to ensure that customers achieve the same result and success with the THIEL Machines as we achieve in our own plant. Sales and Service Engineers, exhibitions and demonstrations at home and abroad provide ample opportunities to study the correct applications and use of our machines. THIEL service men are recruited from the best and most experienced tool makers employed and are not only at home with THIEL machines, but are fully experienced in all phases of tool room practice.

WORKING RANGE WITH EQUIPMENT AND WEIGHT OF THE

THIEL DUPLEX 158

Machine

Drive:

H.P. required	2.2
RPM of motor	1500

Horizontal spindle:

No. of spindle speeds	12
RPM of spindle 60/80/106/140/180/240/320/470/536/700/920/1200	
Collet capacity	1"
3-jaw chuck capacity	4-1/4"

Headstock:

Horizontal, hand and power traverse	8"

Over-arm:

Horizontal hand adjustment	16-1/2"
Distance centre of spindle to underside	2-3/4"

Universal swivel and tilting table:

(Standard equipment)

Working surface	10-1/2" x 28-1/2"
Max distance centre of spindle to table surface	16"
Width of T-slots	9/32"
Table swivels each way	30°
Table tilts front and rear	30°
Hand and power longitudinal traverse	12-1/2"
Hand and power vertical traverse	16"

Automatic feeds:

Horizontal and vertical table traverse reversible and headstock traverse reversible

No. of feeds	8
Range of feeds	3/8, 5/8, 1, 1-1/4, 1-3/4, 3, 4, 6-1/4 per min

Feed screws hardened and ground:

1 R.P.M. of dial	1/8
1 division on dial	.001"

External dimensions:

Total height of machine including attachment No.5	70"
Area of machine base	26" x 33"
Floor space required	44" x 66"

Weights:

	Nett	Gross	Boxed	
Bare machine	22	26	27	cwts
Complete machine	26	30	32	cwts

Dimensions of machine boxed:

52" x 52" x 48" – approx – 64 cu.ft.

Attachments

Attachment No.1 – Universal dividing head:

Collet capacity	1"
3-jaw chuck capacity	4-1/4"
Dividing head swivels	360°
Max distance collet to tailstock centre	11"
Distance centre of collet to base	4-1/4"
Max distance between dividing head base and tailstock	19"

No. of holes for direct dividing with hole circles as follows: 15/16/17/18/19/21/23/27/29/31/41/43/47/49/53

Standard equipment for same: Overarm, tailstock, faceplate, driver plate, with centre and M.T. socket.

Attachment No.2 – Universal vice:

Vice swivels	360°
Max opening of jaw	3"
Width of jaws	4-1/4"
Height of jaws	1-1/4"

Attachment No.3 – Horizontal swivel table:

Working surface	5" x 32"
Table swivels each way	10°
Width of T-slot	9/32"

Attachment No.4 – Universal slotting head:

No. of strokes	8
Actual strokes	34/45/60/78/100/135/180/235
Adjustment of stroke	0 – 3"
Adjustment of slide	1-1/2"
Head swivels	360°

Attachment No.5 Vertical milling and drilling head:

Collet capacity	1"
Hand traverse of spindle	3-1/2"
Max. horizontal distance between centre of spindle to machine column	29"
Head swivels	360°
No. of speeds	12
Actual speeds rpm	90/120/160/210/270/360/480/705/805/1050/1380/1800

Nett weight:

Attachments	1	2	3	4	5	6
	145	55	55	100	90	110 lbs

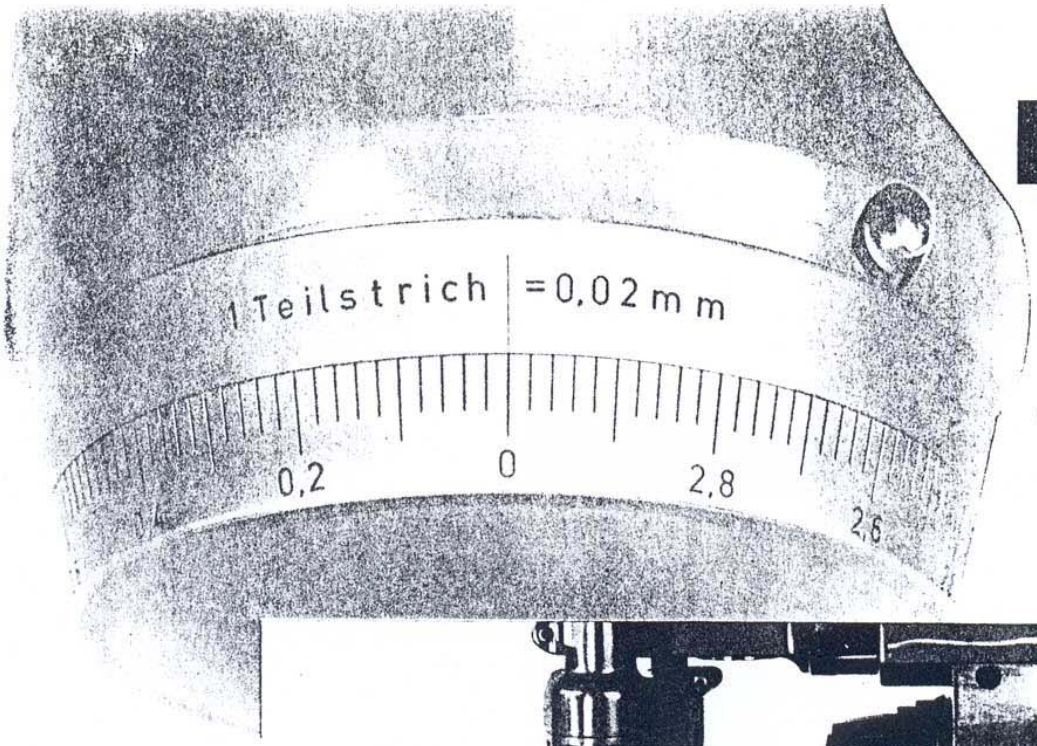

Super Precision

Large easily read division collars – each division = 0.02 mm (0.001")

Note: All leadscrews, dials, dial gauges and scales in inch dimensions (Metric Machines supplied if required).

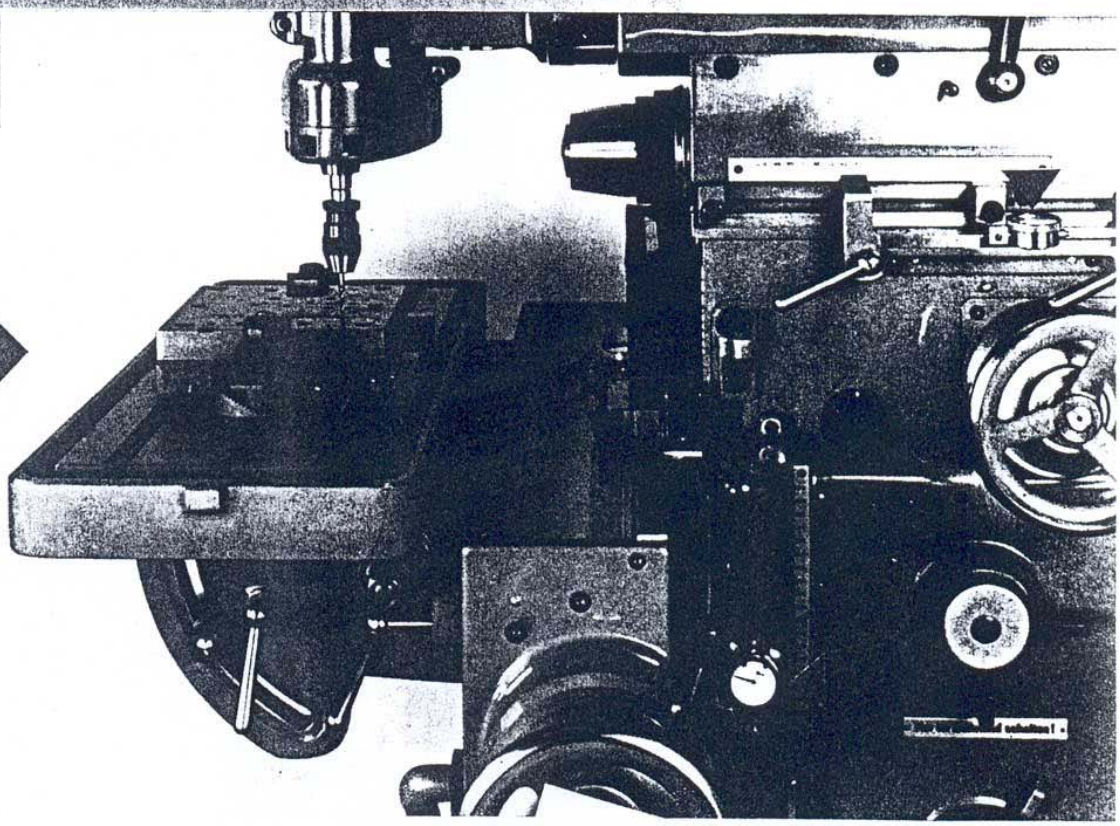

Jigboring equipment for tolerances within ± 0.01 - 0.02 mm (0.0004 - 0.0008") by slip gauges and dial indicators or precision rules with adjustable zero lines.

Hardened, precision ground leadscrews with lapped nuts of special bronze give long life and high accuracy.

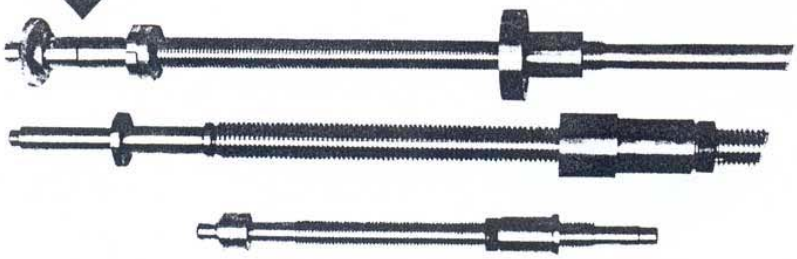

The test chart provides evidence regarding accuracy of alignment of both milling spindle axes, accuracy of all slide ways and table surfaces, accuracy of concentricity of all rotating parts etc.

Versatility . . .

ONE machine with ONE HUNDRED uses - The following 9 examples show how the workpiece can be arranged at any angle relative to the cutting tool and vice versa, they show how widely the types of workpieces vary, how many different tools can be employed and the many ways in which attachments and clamping combine to give real versatility.

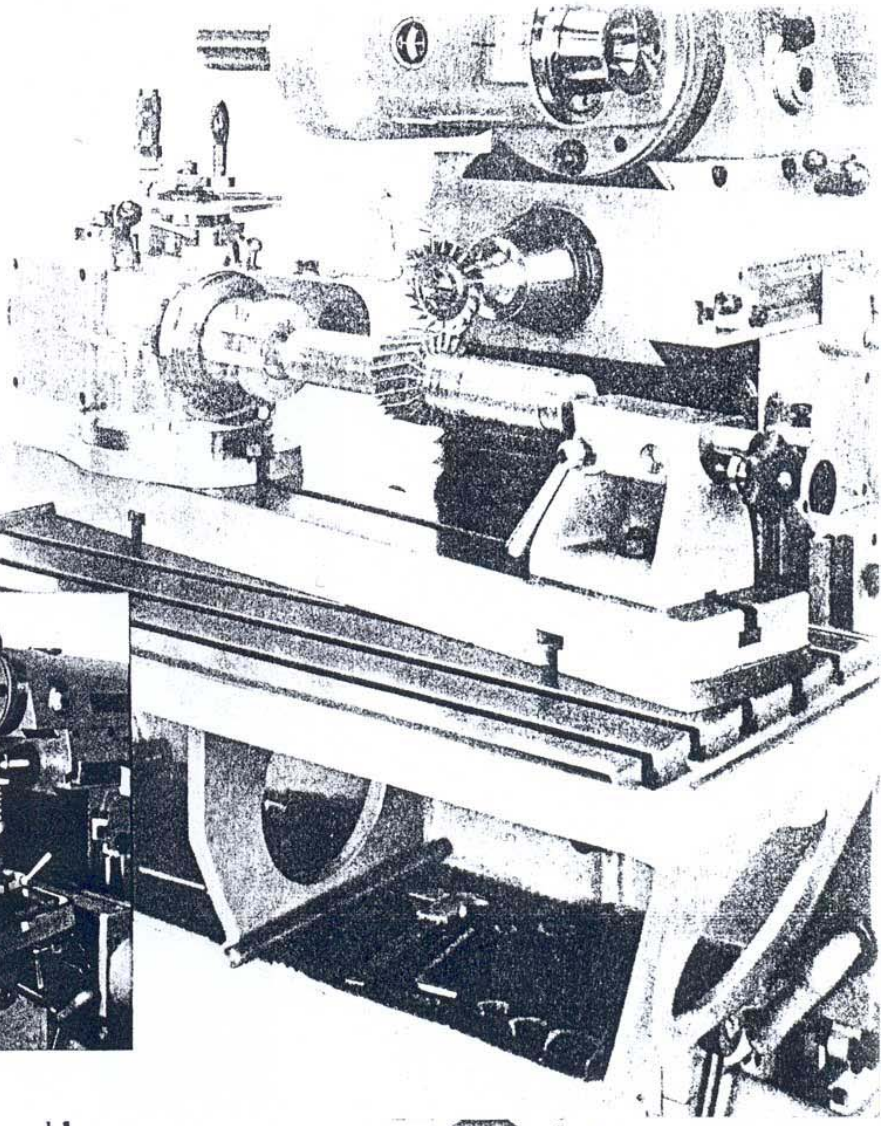

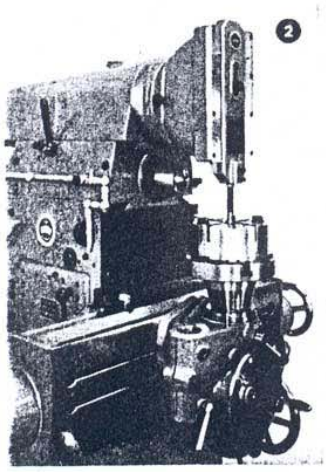

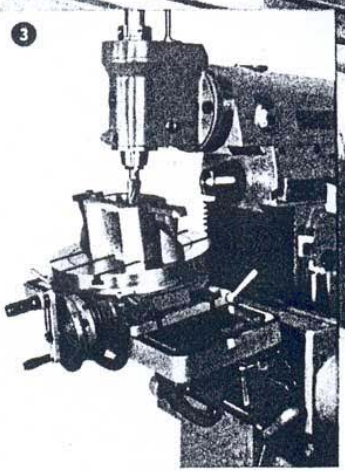

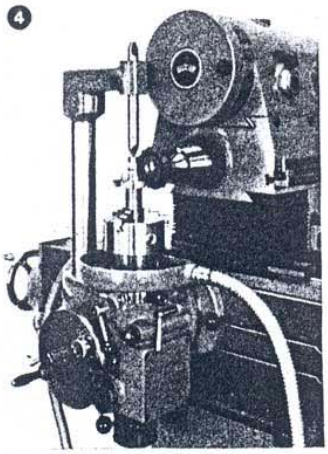

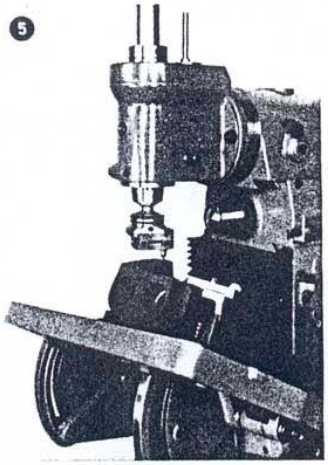

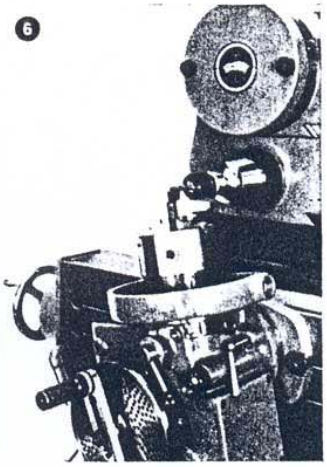

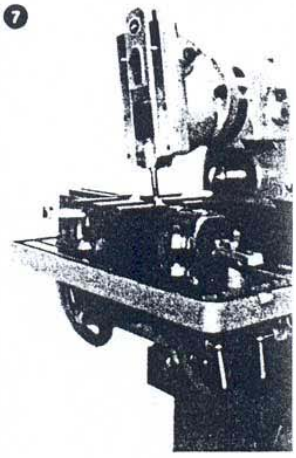

1. Milling a skew toothed cutter
2. Internal slotting of a control housing
3. Milling a mould
4. Milling a press tool punch
5. Boring a machine part
6. Milling a slotting tool
7. Profile slotting the frame of a special machine
8. Drilling near the slideways of machine frame
9. Milling an awkward casting

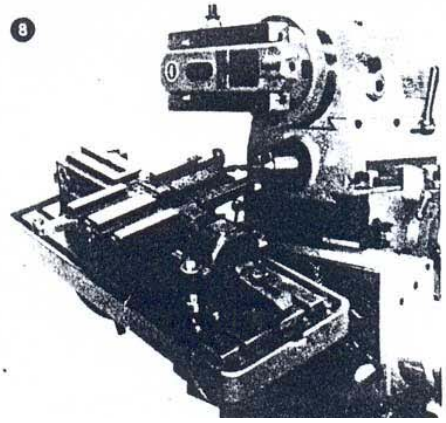

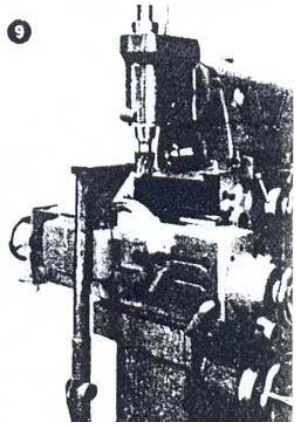

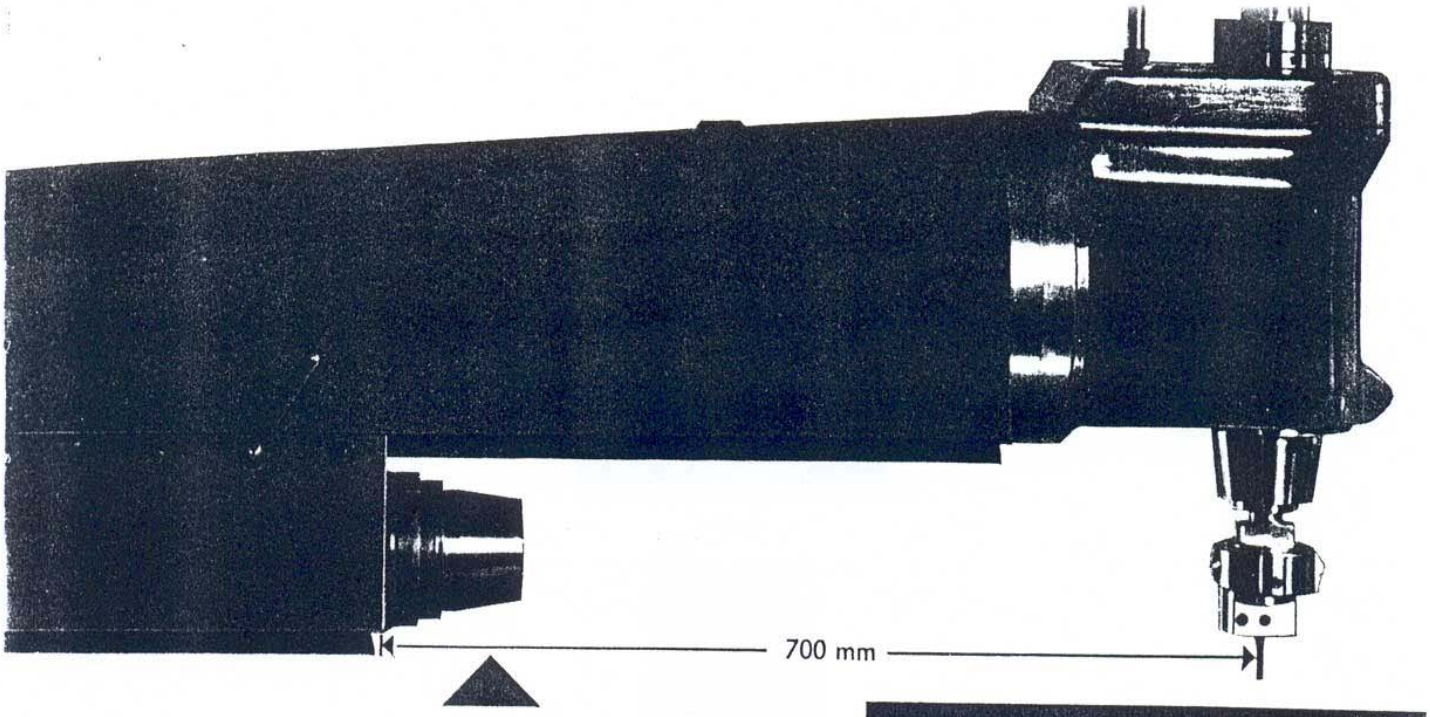

Throat depth between
milling cutter and machine column = 700 mm (27½")
Vertical milling spindle is above centre line
of horizontal milling spindle

A really wide machining range means:
no reclamping even of awkward
workpieces, no changing of the basic
angle, no re-aligning, simplification
of task in hand, large time savings,
high accuracy

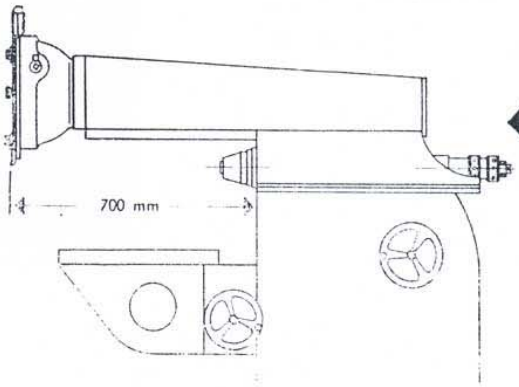

Long reach
for slotting head
(Att. 4)

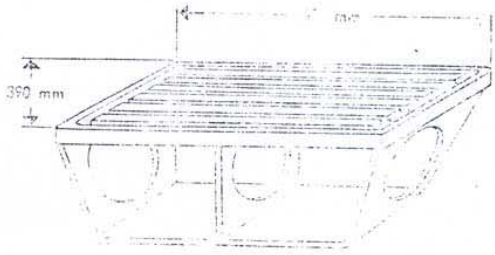

Clamping area
of large work
table (Att. 9)
= 830 x 390 mm
(32⅝ x 15⅜")

Maximum distance between
vertical heads (Att. 4, 5 & 7)
and work tables = 445 mm (17½")

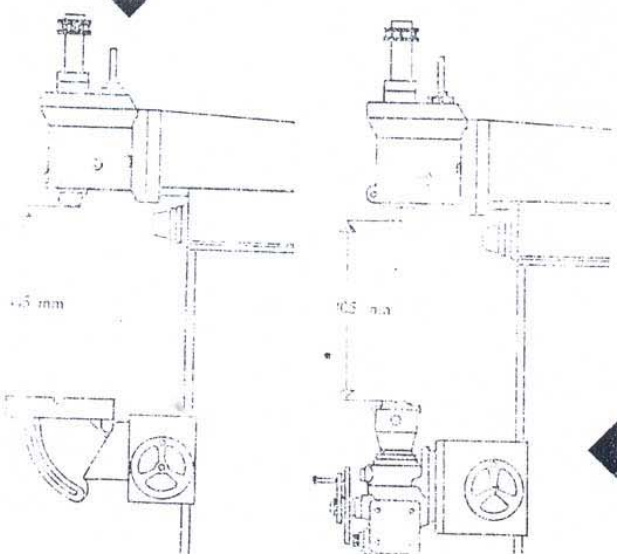

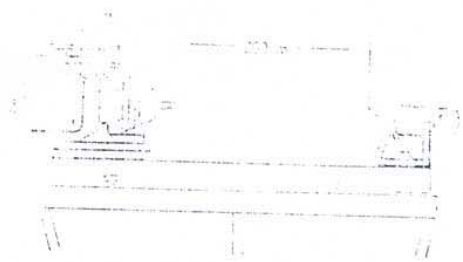

Maximum
distance
between
dividing head
and tailstock
(Att. 1)
on horizontal
swivel table
(Att. 3) = 380 mm
(15")
not 280 mm (11")

Maximum distance between
vertical heads (Att. 4, 5 & 7) and
dividing head (Att. 1) = 405 mm (16")

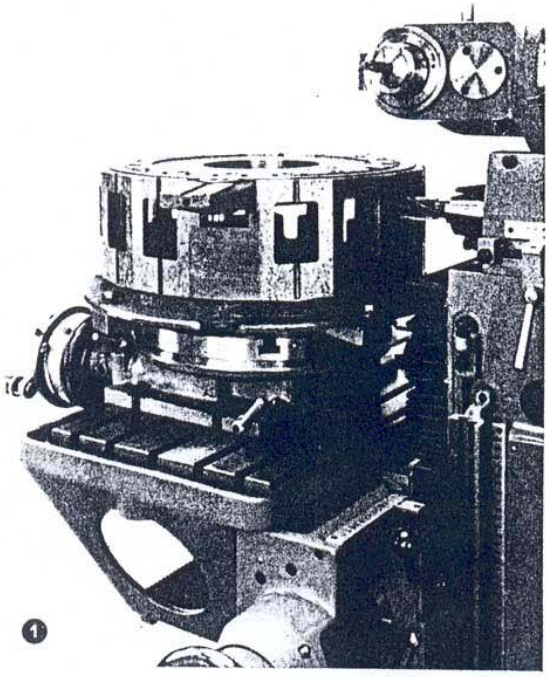

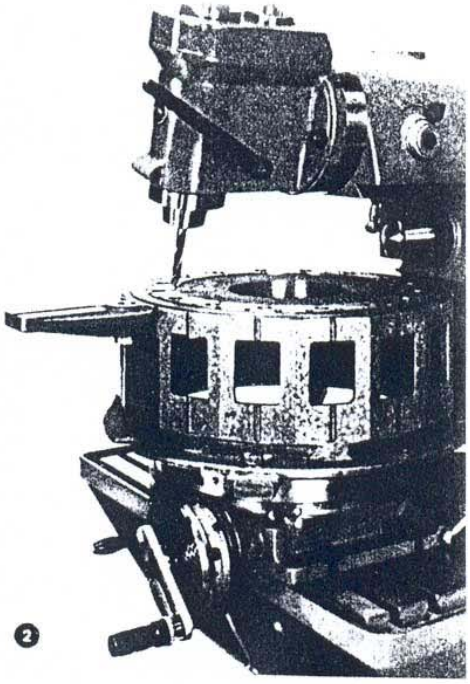

❶ Horizontal end-milling, vertical head swivelled clear

❷ Vertical drilling at an angle of 15°

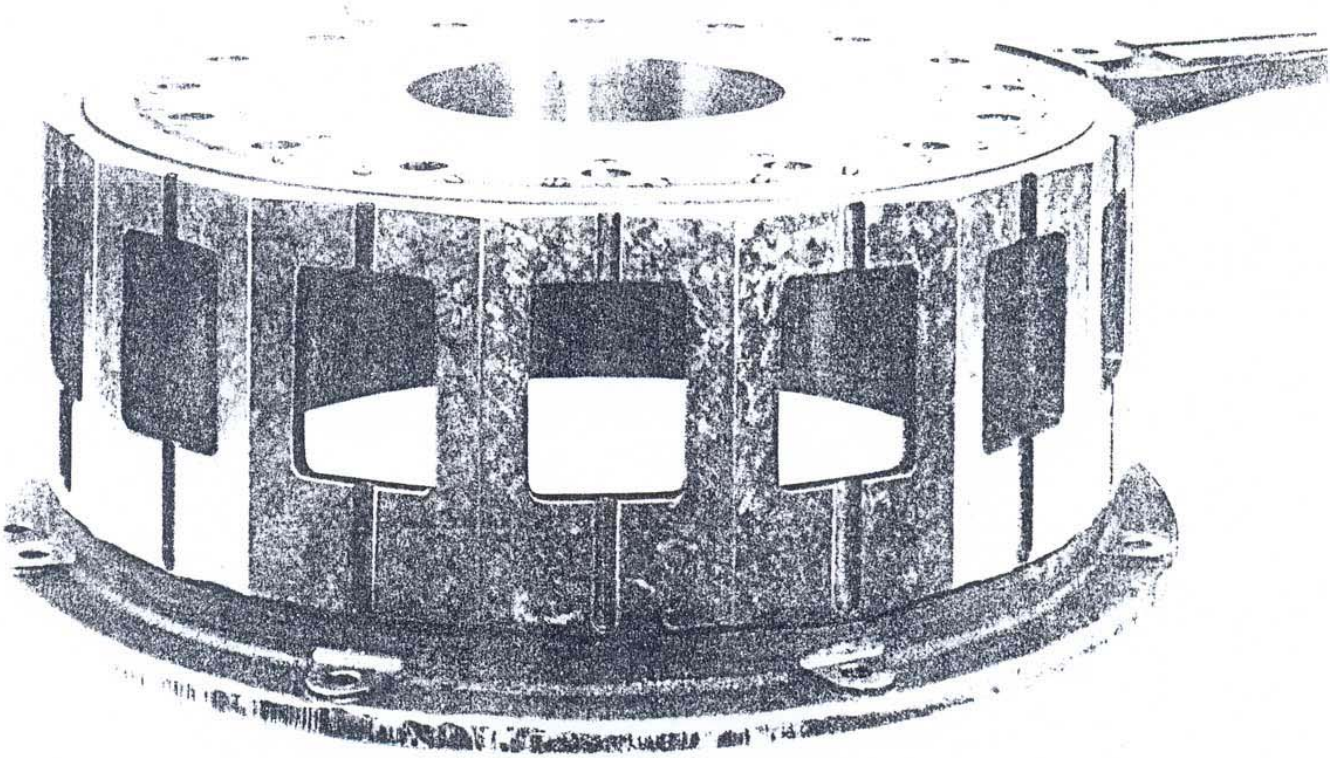

This complicated special purpose machine body was drilled – reamed – bored – milled – slotted on all sides with a THIEL DUPLEX 158 without the need to exchange any attachments, without re-clamping, without fixtures or other aids!

Simple, because one overarm mounts all vertical attachments

Simple, because the vertical attachments can be swivelled clear and brought back into the working zone at a moments notice without the need for any dismantling or re-fitting.

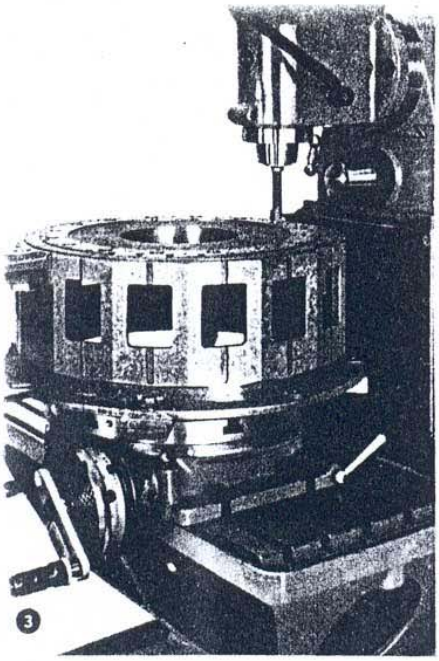

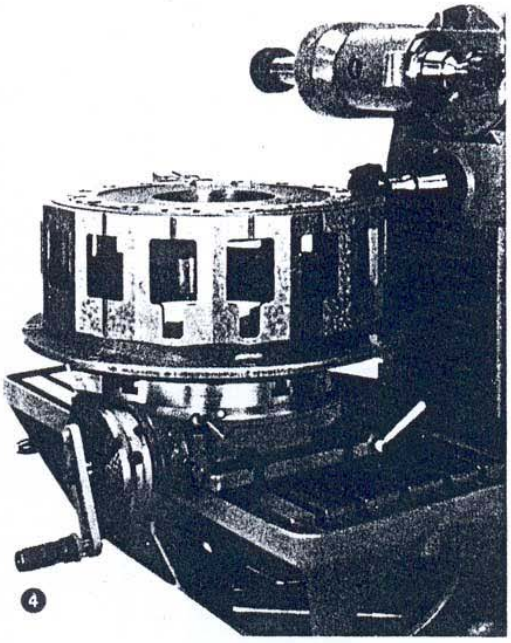

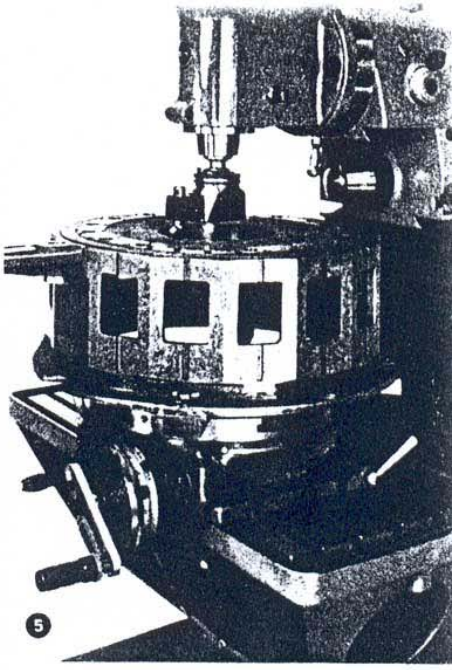

3 Manual slotting with arrested spindle rotation

4 Face milling with cutter head, cutter head in vertical spindle is shown swivelled clear after face milling the top of the body

5 Boring and cutting a recess

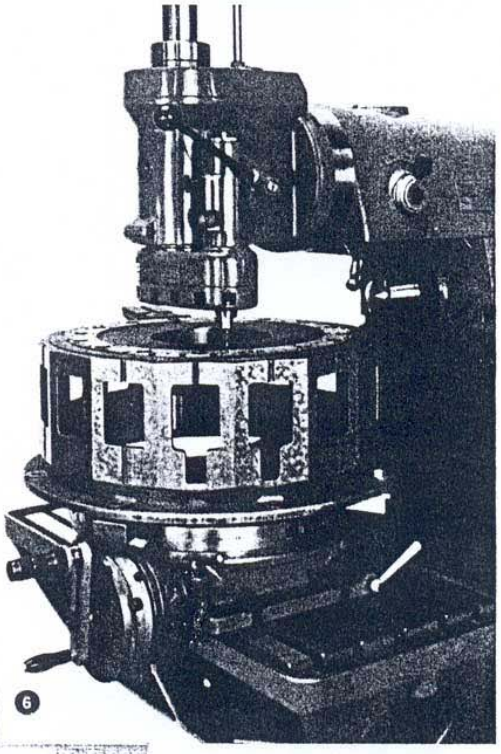

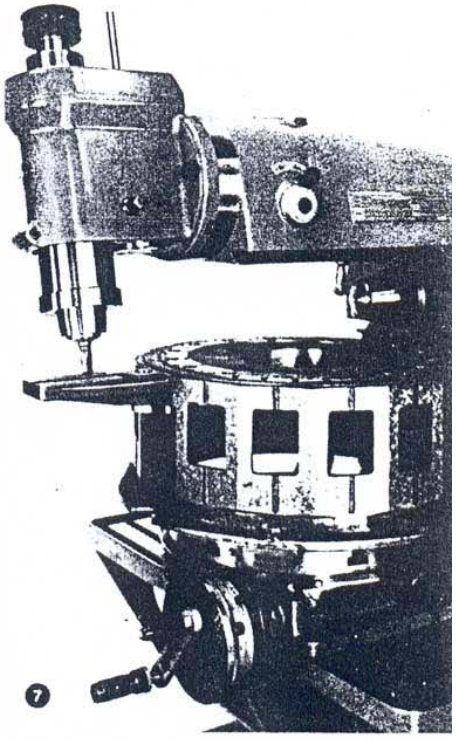

8

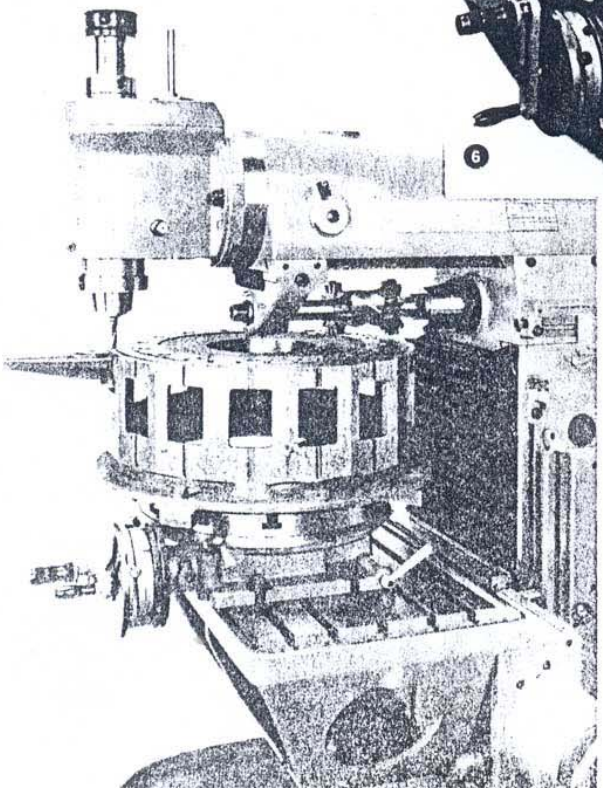

6 Drilling of small holes with high speed drilling head (Att. 8)

7 Vertical milling at angle of 8° with 625 mm (24 5/8") overhang

8 Vertical end-milling, — at the same time horizontal spindle carries milling arbor with set of straddle profile cutters and helical roll cutter, horizontal milling arbor runs in arbor support bearing.

Operational safety to protect man and machine is catered for in every respect on the
THIEL DUPLEX 158

The motor is equipped with a sliding commutator which brakes all rotating parts of the machine instantaneoulsy when switched off – cutting tools stop immediately, – no idle rotation – no danger of accidents.

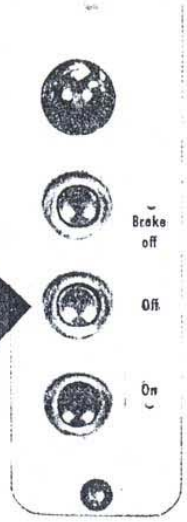

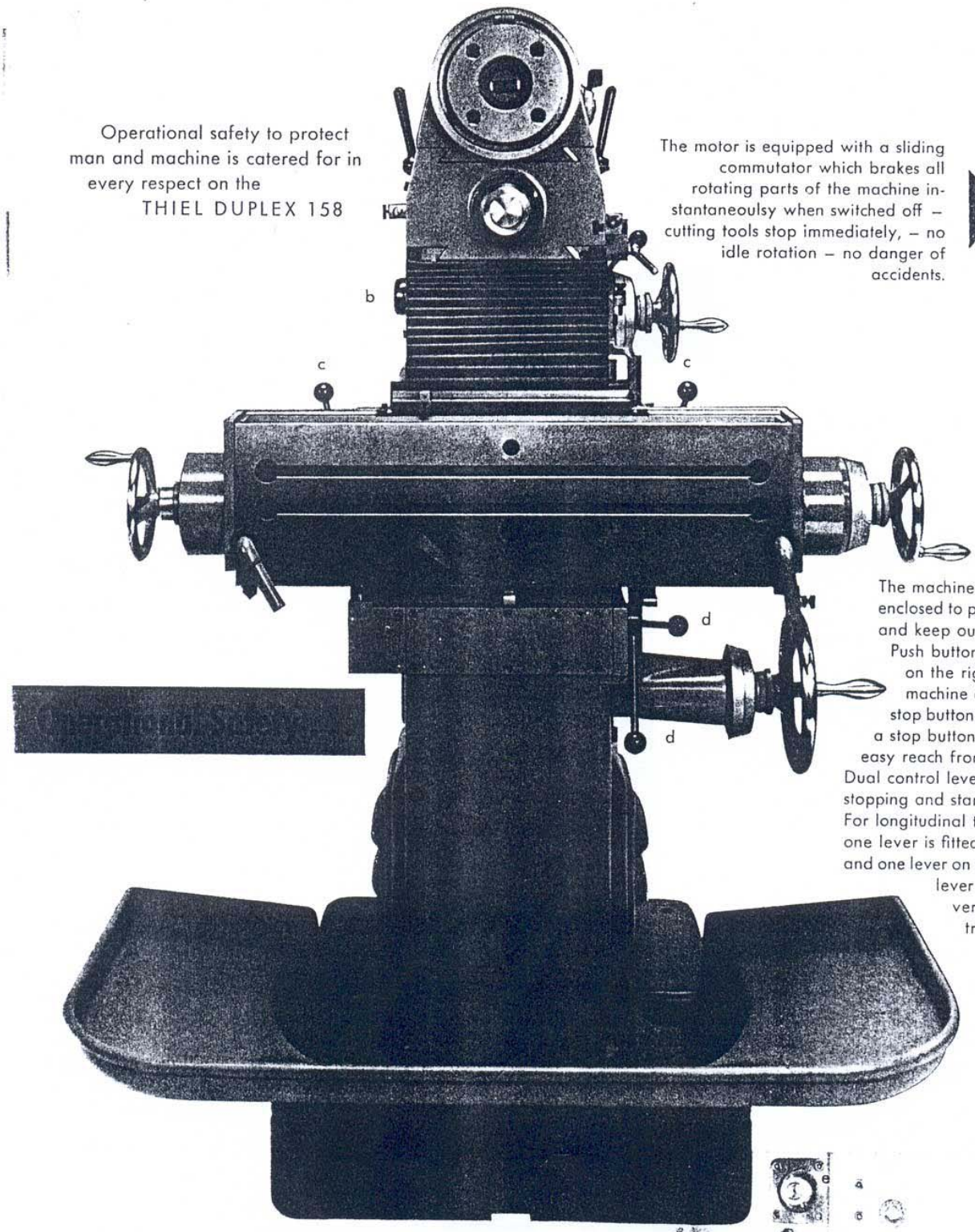

The machine is totally enclosed to prevent accidents and keep out swarf.
Push button panel (a) on the right of the machine and emergency stop button (b) on the left – a stop button always within easy reach from any position.
Dual control levers (c) for stopping and starting table feeds. For longitudinal table traverse one lever is fitted on the right and one lever on the left. A double lever (d) serves for the vertical table traverse and can be reached from the front and the rear.

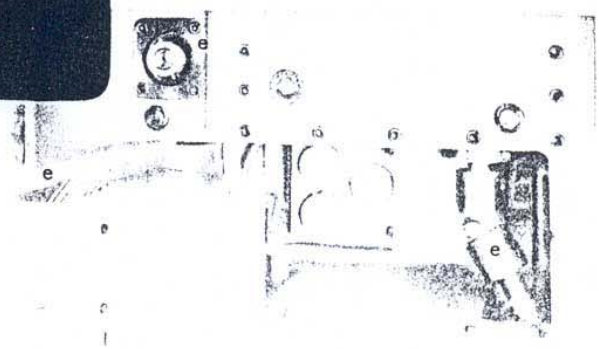

Milling spindles and feeds are protected by readily accessible shear pins (e). – Shear pins can be re-fitted without dismantling or other difficulty.

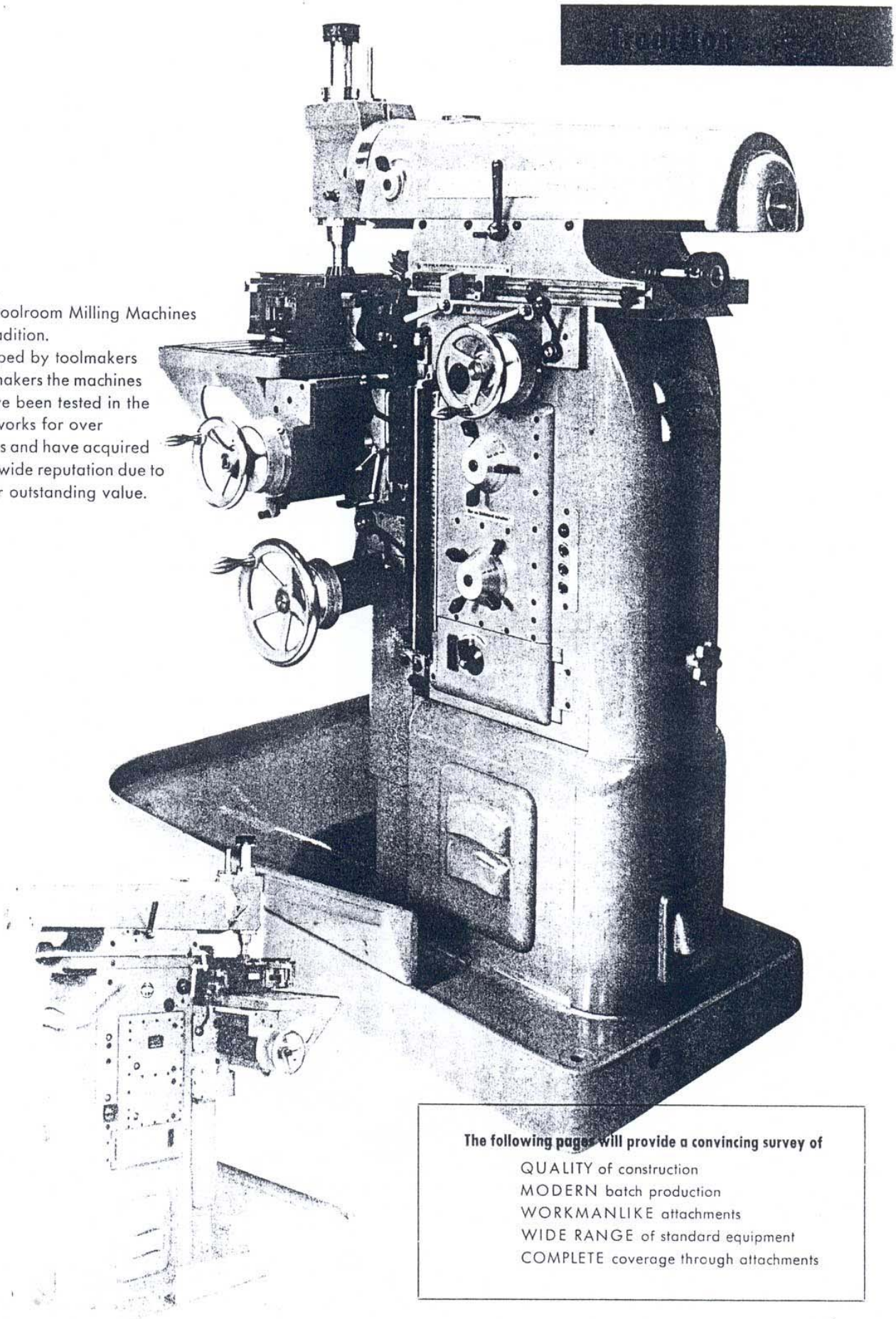

THIEL Toolroom Milling Machines are a tradition.
Developed by toolmakers for toolmakers the machines have been tested in the THIEL works for over 50 years and have acquired a world-wide reputation due to their outstanding value.

The following pages will provide a convincing survey of

QUALITY of construction
MODERN batch production
WORKMANLIKE attachments
WIDE RANGE of standard equipment
COMPLETE coverage through attachments

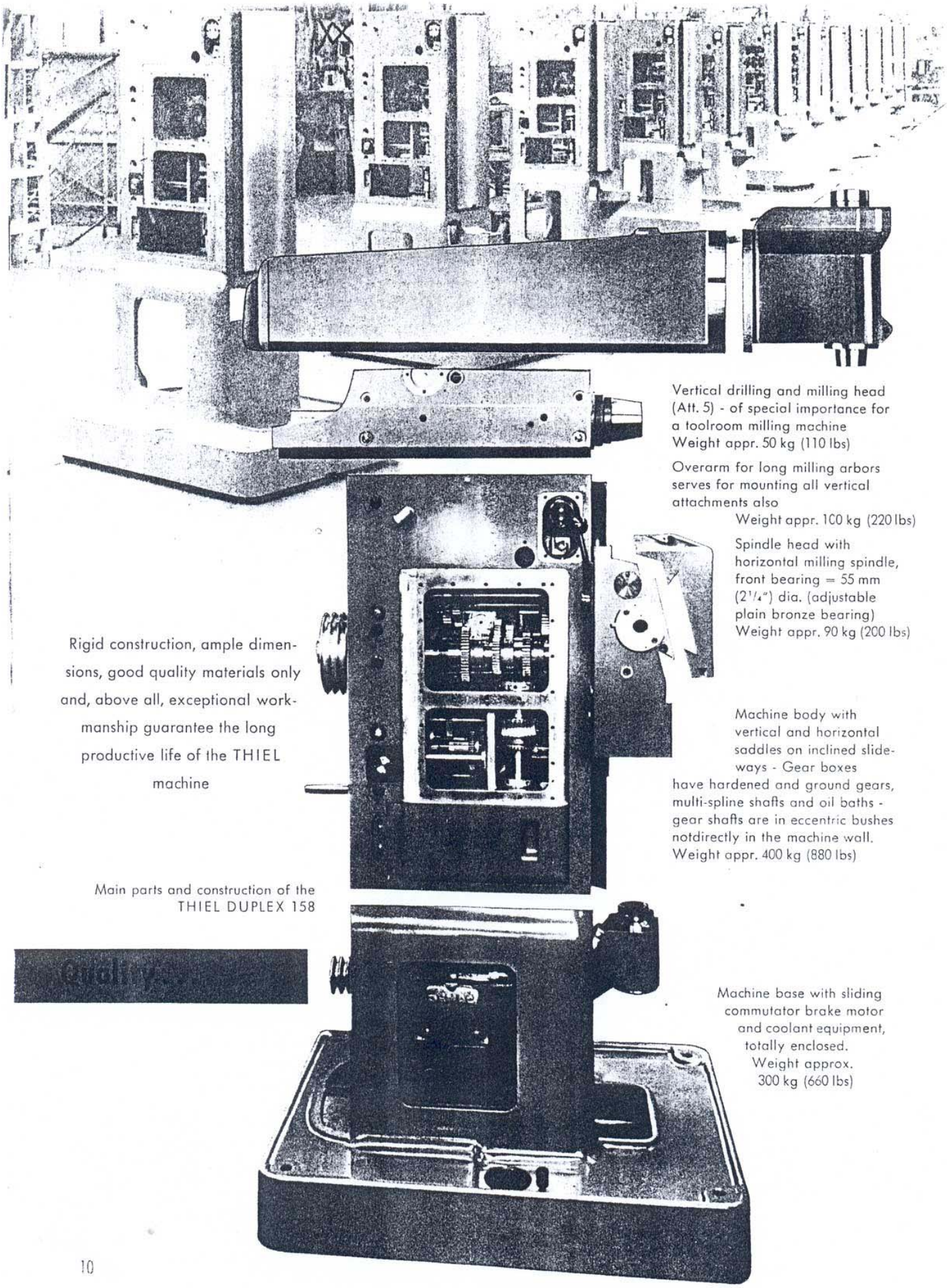

Vertical drilling and milling head (Att. 5) - of special importance for a toolroom milling machine
Weight appr. 50 kg (110 lbs)

Overarm for long milling arbors serves for mounting all vertical attachments also
Weight appr. 100 kg (220 lbs)

Spindle head with horizontal milling spindle, front bearing = 55 mm (2¼") dia. (adjustable plain bronze bearing)
Weight appr. 90 kg (200 lbs)

Rigid construction, ample dimensions, good quality materials only and, above all, exceptional workmanship guarantee the long productive life of the THIEL machine

Machine body with vertical and horizontal saddles on inclined slideways - Gear boxes have hardened and ground gears, multi-spline shafts and oil baths - gear shafts are in eccentric bushes notdirectly in the machine wall.
Weight appr. 400 kg (880 lbs)

Main parts and construction of the THIEL DUPLEX 158

Quality...

Machine base with sliding commutator brake motor and coolant equipment, totally enclosed.
Weight approx. 300 kg (660 lbs)

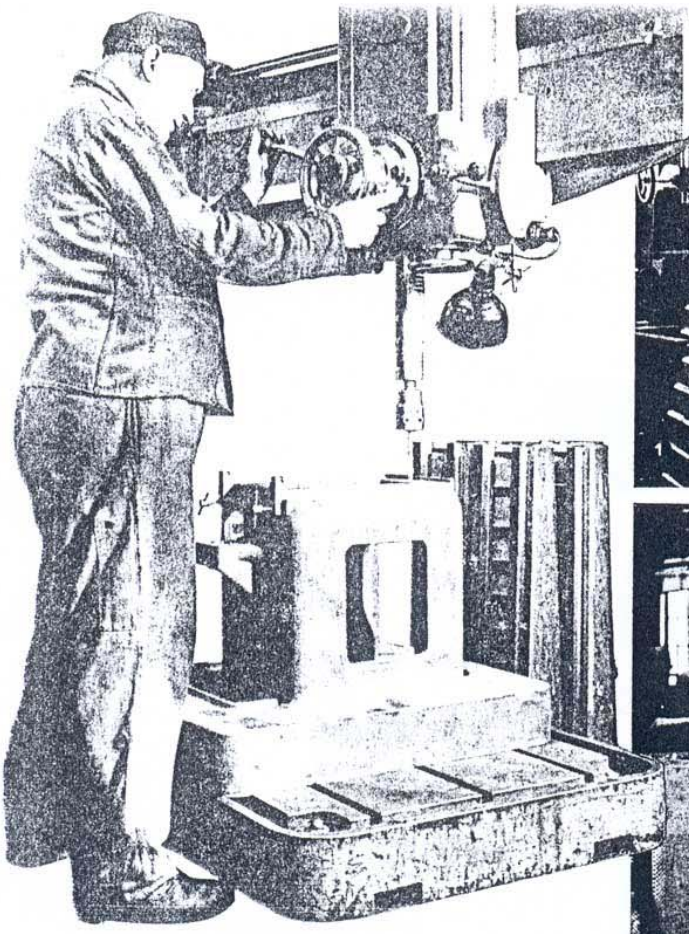

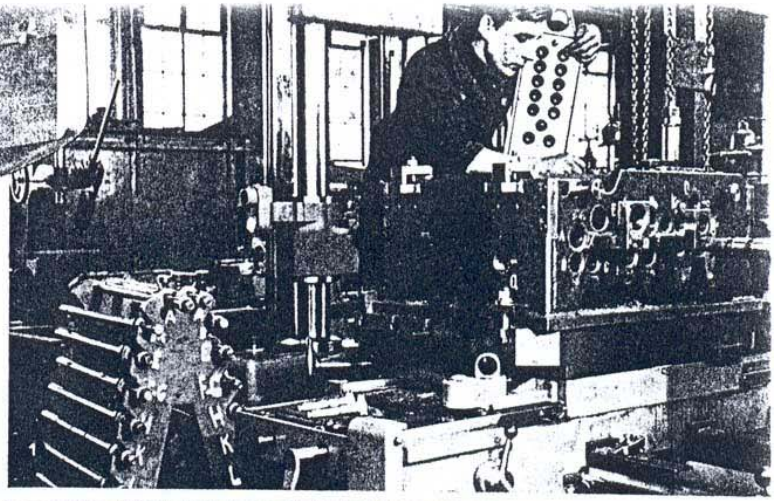

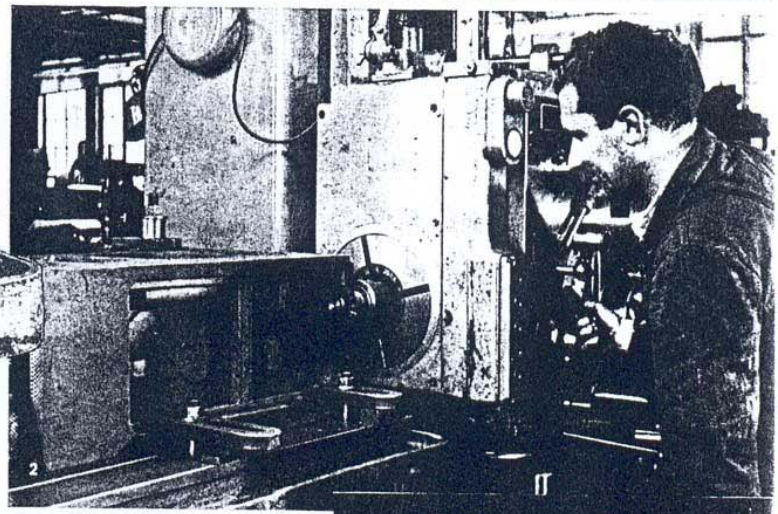

All parts of the THIEL DUPLEX 158 are interchangeable. The machines are built with up-to-date equipment in large batches. High quality fixtures and gauges ensure precision.

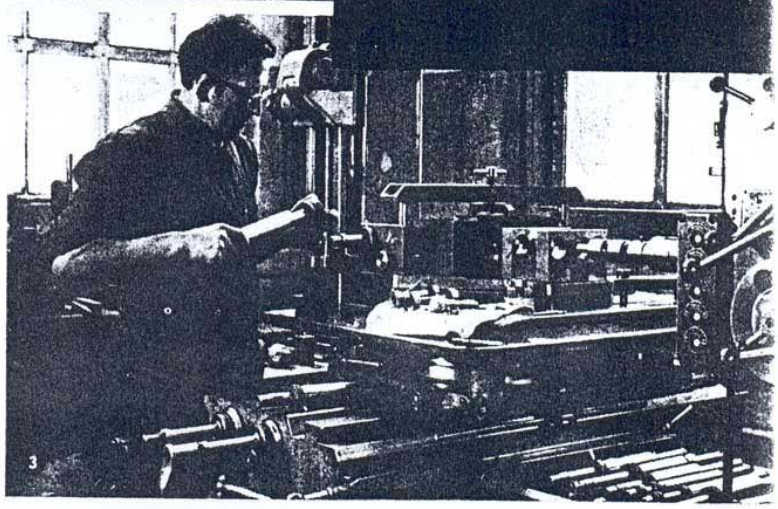

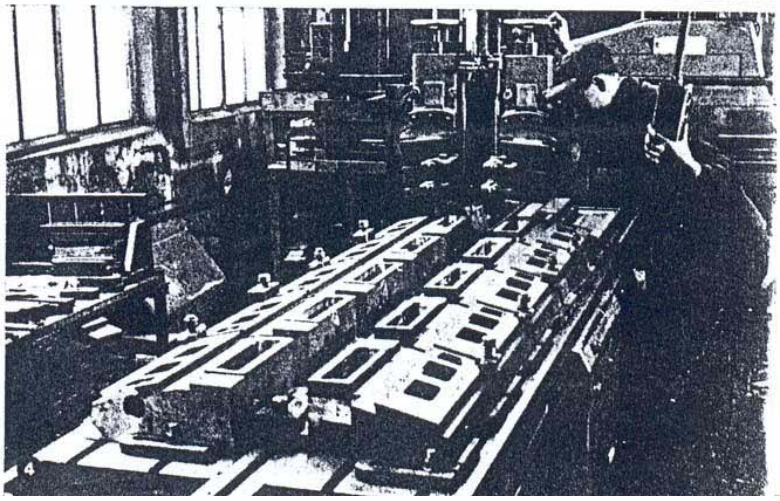

1. Boring of gear shaft bearings on machine body in fixture
2. Milling column slideways
3. Boring the bearings of vertical saddle in fixture
4. Planing 10 vertical saddles in one clamping

Attachments complete the equipment and enable the THIEL DUPLEX 158 to do "everything".
With the exception of No. 5 & 7 the attachments are interchangeable and can be purchased at any time.
Attachments 1, 2, 3, 6, 9, 12 & 13 will also fit the old THIEL DUPLEX 58.

Attachments ...

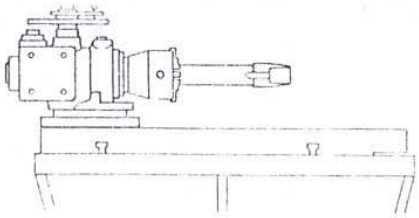

Att. 1 Universal dividing head
MT 5, Collet capacity up to 25 mm (1") dia.
Three-jaw chuck capacity up to 110 mm (4 - 5/16") dia.
Swivel through 360°.
Maximum distance, collet to support centre = 280 mm (11")
Distance, base to centre = 110 mm (4 - 5/16")
Maximum distance, dividing head to tailstock = 380 mm (15")
Number of holes for direct dividing = 24
3 dividing discs for indirect dividing with the following Nos. of holes:
15/16/17/18/19/21/23/27/31/33/37/39/41/43/47/49/53
Equipment: counter support, tailstock, face plate, carrier with centre in taper sleeve MT2 - Weight approx. 65 kg. (143 lbs.)

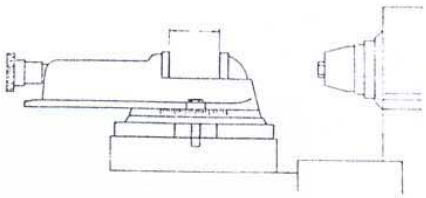

Att. 2 Universal vice
Swivel trough 360°
Maximum chucking width 100 mm (4")
Jaw height 40 mm (1 1/2"),
jaw width 135 mm (5 3/4")
Weight approx. 35 kg (77 lbs.)

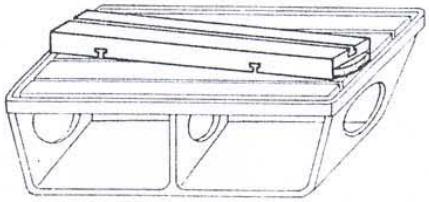

Att. 3 Horizontal swivel table
Working surface 130 x 800 mm (5 1/4 x 31 1/2")
Swivel both ways through 10°
1 T-slot, width 14 mm (9/16")
Weight approx. 25 kg (55 lbs.)

Att. 8 Precision high speed drilling and milling head
Collet capacity 0.5 - 5.5 mm (0.020 - 7/32") dia.
Spindle speeds (usable) 1720/2240/2920/3840/5000 R. P. M.
Max. stroke (drilling traverse) 40 mm (1 - 9/16")
Weight approx. 10 kg (22 lbs.)

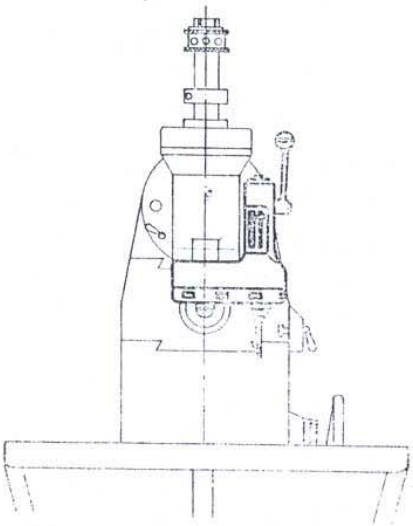

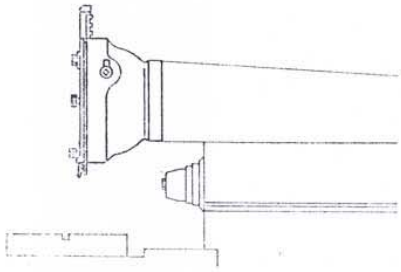

Att. 4 Universal slotting head
Number of strokes 8
Stroking rates 34/45/60/78/100/135/180/235 min.
Stroke adjustment 0 - 80 mm (0 - 3 1/4")
Slide adjustment 40 mm (1 - 9/16")
Swivel through 360°
Weight approx. 45 kg (99 lbs.)

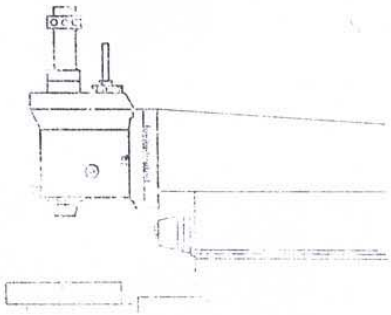

Att. 5 Vertical drilling and milling head
MT 5, Collet capacity up to 25 mm (1") dia.
Axial spindle movement 80 mm (3 1/2")
Max. distance, spindle centre to column face 700 mm (27 1/2")
Swivel through 360°
12 spindle speeds, 90/120/160/210/270/360/480/705/805/1050/1380/1800 R. P. M.
Weight approx. 40 kg (88 lbs.)

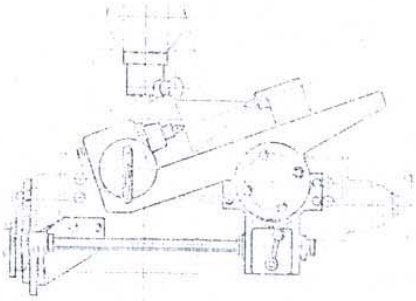

Att. 10 Universal spiral milling attachment
MT 5, for cylindrical spirals, in conjunction with Universal Milling Head No. 11, also for tapered spirals of up to 30°.
Height of centers 80 mm (3"), distance between centers 360 mm (14"), pitch range 3 to 6000 mm.
Weight approx. 130 kg (286 lbs.)

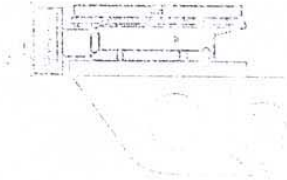

Att. 6 Circular table
Table diameter 380 mm (15")
T-slots 14 mm (9/16")
Table height 115 mm (4 1/2")
Reading accuracy 6 seconds of arc
Weight approx. 65 kg (143 lbs.)

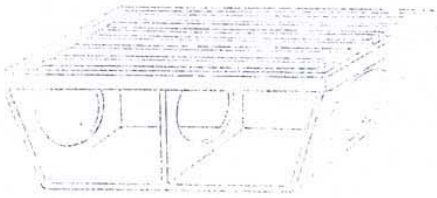

Att. 9 Special large work table
Work area 390 x 820 mm (15 3/4 x 32 1/4")
5 T-slots, width 14 mm (9/16")
Can be moved across machine column either way through 100 mm (4")
Weight approx. 85 kg (187 lbs.)

The following items are included in the price of the machine – (please carefully note when comparing prices) –:
Overarm for long milling arbors and to mount vertical attachments 4, 5, 7 and 8 (8 only in conjunction with Att. 5 & 7). Power feeds in both directions for work tables and spindle head. Jigboring equipment with 3 scales also slip gauge platforms, 1 complete coolant equipment with pump and piping.
Further, as listet below:

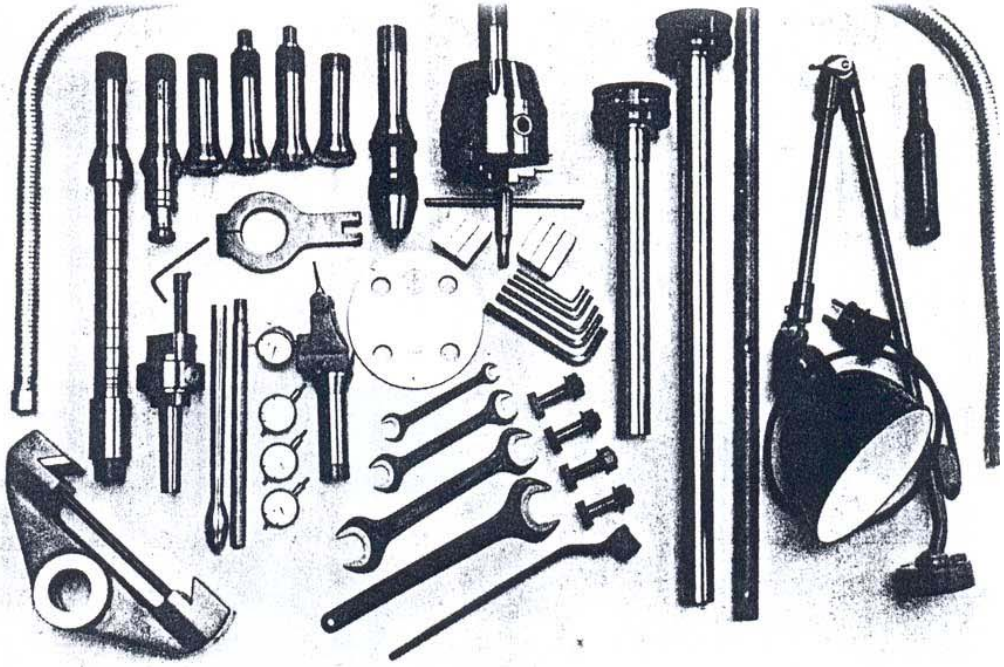

1 test piece (jig bored "master"), 1 overarm arbor support bearing for long milling arbors, 1 short and 1 long milling arbor, 1 each taper sleeve MT 2, 3 and 4, 2 collet spanners, 2 return tubes for coolant equipment, 1 swarf tray, 1 complete lighting installation (with 50 volts transformer) 1 grease gun, 1 arresting ring for Att. 5, all necessary fixing screws, handles, spanners, dividing tables, operating instructions spare part books etc.

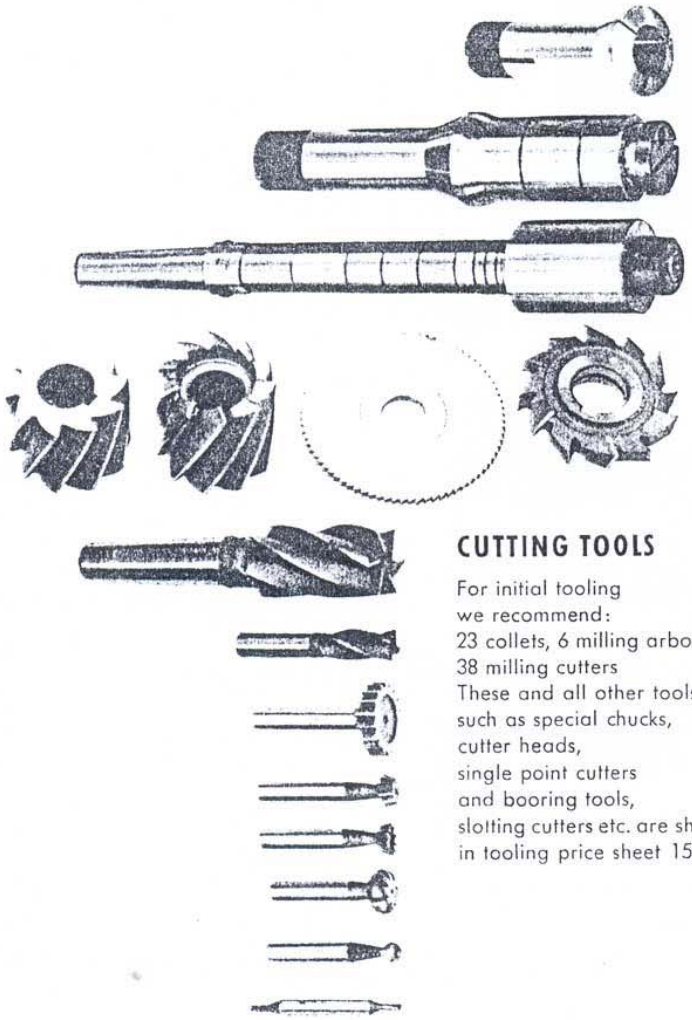

CUTTING TOOLS

For initial tooling we recommend:
23 collets, 6 milling arbors, 38 milling cutters
These and all other tools such as special chucks, cutter heads, single point cutters and booring tools, slotting cutters etc. are shown in tooling price sheet 158/28.

Extra Equipment ...

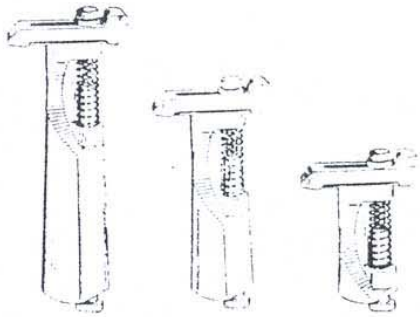

WORK CLAMPS

The stepped work clamps "158" permit rapid and secure clamping of all workpieces, preserve the work tables and speed the work.
The following types and dimensions are suitable for THIEL toolroom milling machines "58" and "158", all have 14 mm (9/16") tenon bolts.

158 – A	0 – 45 mm	(0 – 1 3/4")
158 – B	15 – 45 mm	(5/8 – 1 3/4")
158 – C	30 – 75 mm	(1 1/4 – 3")
158 – D	60 – 135 mm	(2 3/8 – 5 1/4")
158 – E	120 – 195 mm	(4 3/4 – 7 3/8")
158 – F	180 – 255 mm	(7 – 10")

Other sizes and dimensions as shown on special list.

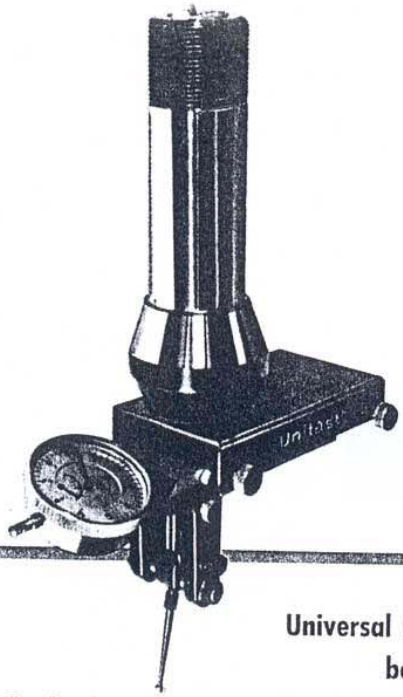

»UNITAST« Centring Instrument

simple, quick, reliable for precision alignment, centring and inspection, of inside diameters, outside diameters and faces on workpieces placed at any angle or position.

Universal facing and boring head

For fine boring, external and internal turning, facing, profile turning, recessing, undercutting, taper turning. This head saves the need for special milling cutters, turning and other special tools as well as special fixtures which may only be used once. The wide field of use of this boring head covers work in tool, jig and fixture manufacture, machine building, instrument making, automotive and motor industry, repair shops etc. The attachment is ultra-accurate, extremely wear resisting and has automatic power feed for facing, automatic disengagement at the end of a facing traverse and rapid return of the facing slide.

Technical details:	
Operational accuracy . .	0.005 mm (0.0002")
Facing and boring range .	260 mm (10 1/4")
Maximum slide off-set . .	48 mm (1 7/8")
Automatic feed/revolution	. 0.05 mm (0.002")
1 division one fine setting .	. 0.01 mm (0.0004")
1 revolution of fine setting	. . 1 mm (0.040")

Shank for THIEL DUPLEX 58: Collet fitting with 23 mm thread

Shank for THIEL DUPLEX 158: MT 3 with draw thread 1/2"
Weight with shank approx. 2 kg (4 lbs)

Extra equipment: 3 boring bars for depths of 30-60 mm (1 1/8-2 1/4"), 2 boring bar holders for work ranges, 85-190 mm (3 3/8-7 1/2") and 160-260 mm (6 1/4-10 1/4"), 4 clamping bushes with bores 8, 10, 12, 14 mm, 4 HSS toolbits, 1 wooden fitted box for complete instrument

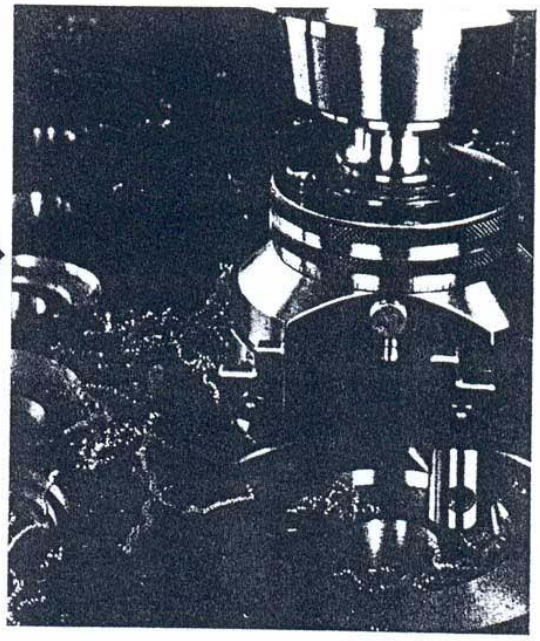

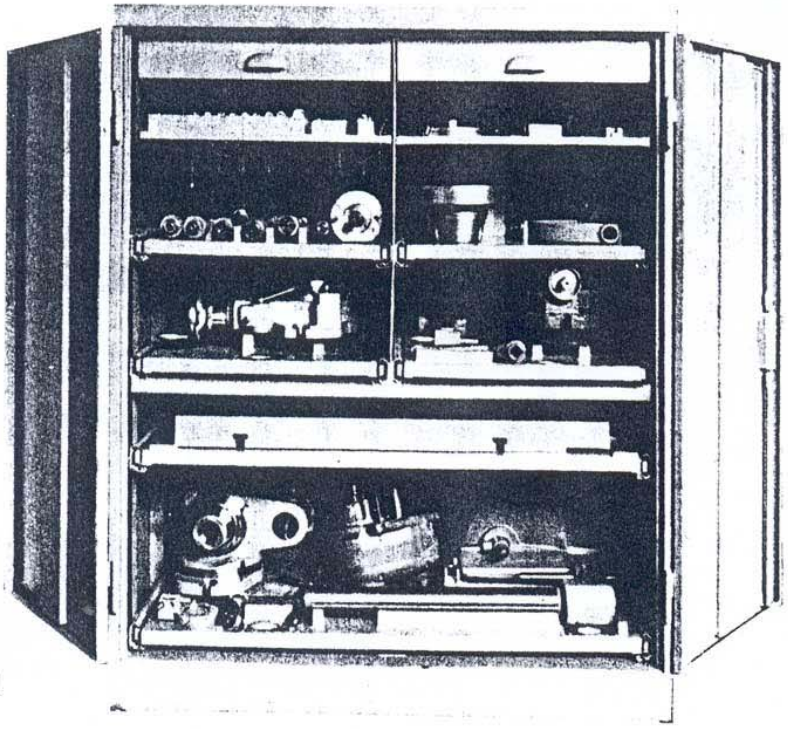

THIEL Toolcabinet »158«

This cabinet will assist in many ways. It will facilitate all machining operations, keep equipment and tools tidy, speed up re-setting and protect the valuable equipment.

The many advantages soon offset the initial cost of this item. Damage to attachments, milling arbors, collets, chucks, measuring equipment etc. left on the shop floor and replacement of cutters and drills etc. lost through untidiness cause expense and annoyance not to mention the ensuing hold-ups. The cabinet is an essential investment for such a valuable machine.

TECHNICAL DATA

DRIVE OF MACHINE

H.P. required	2.2
R.P.M. of motor	1500

HORIZONTAL SPINDLE

No. of spindle speeds	12
R.P.M. of spindle	60/80/106/140/180/240/320/470/536/700/920/1200
MT 5 Collet capacity	1"
3-jaw chuck capacity	4¼"

HEADSTOCK

Horizontal, hand and power traverse	8"

OVER-ARM

Horizontal hand adjustment	16½"
Distance centre of spindle to underside	2¾"

UNIVERSAL SWIVEL and TILTING TABLE

Working surface	10½ x 28½"
Max. distance centre of spindle to table surface	16"
Width of T-slots	9/16"
Table swivels each way	30°
Table tilts front and rear	30°
Hand and power longitudinal traverse	16"
Hand and power vertical traverse	16"

AUTOMATIC FEEDS

Horizontal and vertical table traverse reversible and headstock traverse reversible

No. of feeds	8
Range of feeds	⅜, ⅝, 1, 1¼, 1¾, 3, 4, 6¼ per min.

FEED SCREWS (hardened and ground)

1 R.P.M. of dial	⅛"
1 division on dial	0.001"

EXTERNAL DIMENSIONS

Total height of machine incl. Att. No. 5	70"
Area of machine base	26 x 33"
Floor space required	44 x 66"

WEIGHTS	Nett	Gross	Boxed
Bare machine	23	27	28 cwts.
Complete machine	32	36	37 cwts.

DIMENSION OF MACHINE BOXED

52 x 52 x 48" = approx. 64 cu. ft.

THIEL-Service

It has always been our practice to ensure that customers achieve the same result and success with THIEL Machines as we achieve in our own plant. Sales and Service Engineers, exhibitions and demonstrations at home and abroad provide ample opportunities to study the correct application and use of our machines. THIEL service men are recruited from the best and most experienced tool makers employed and are not only at home with THIEL machines, but are fully experienced in all phases of tool room practice.

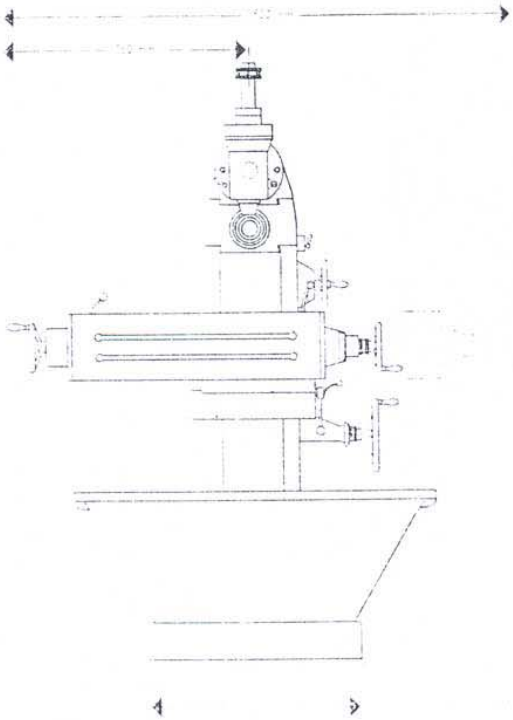

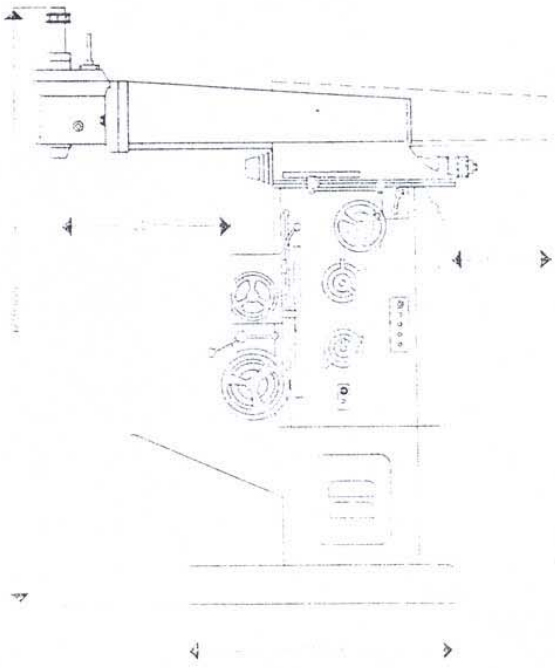

This leaflet is not obligatory in any part. – This publication or any parts thereof, may not be reproduced in any form.

Gesamtgestaltung Werbeberater Marahrens, Stuttgart-Vaihingen · Druck Günthner-Druck Stuttgart · M 367 / 4943 . 458

THIEL DUPLEX 158

UNIVERSAL TOOLROOM MILLING MACHINE

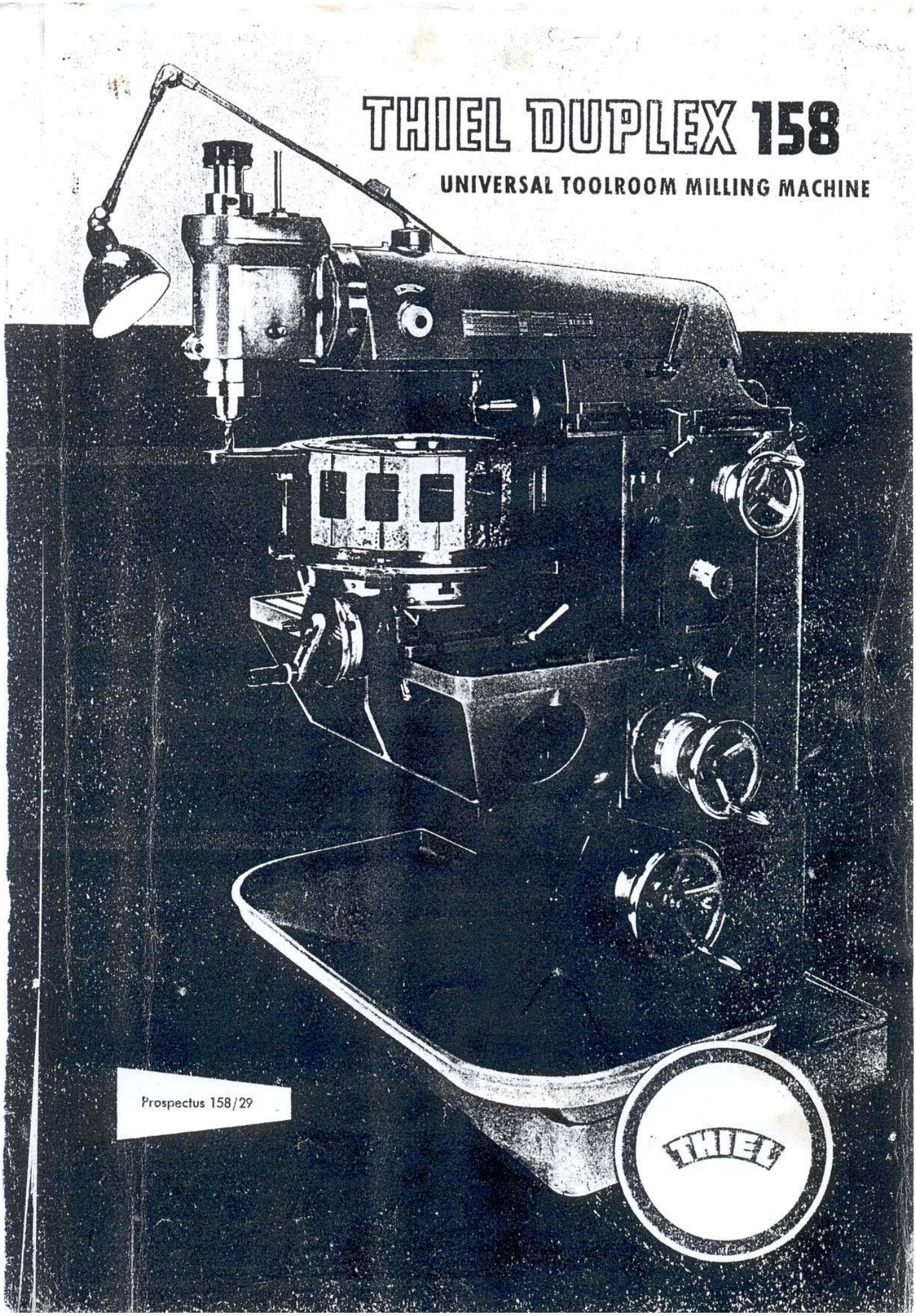

Prospectus 158/29

THIEL

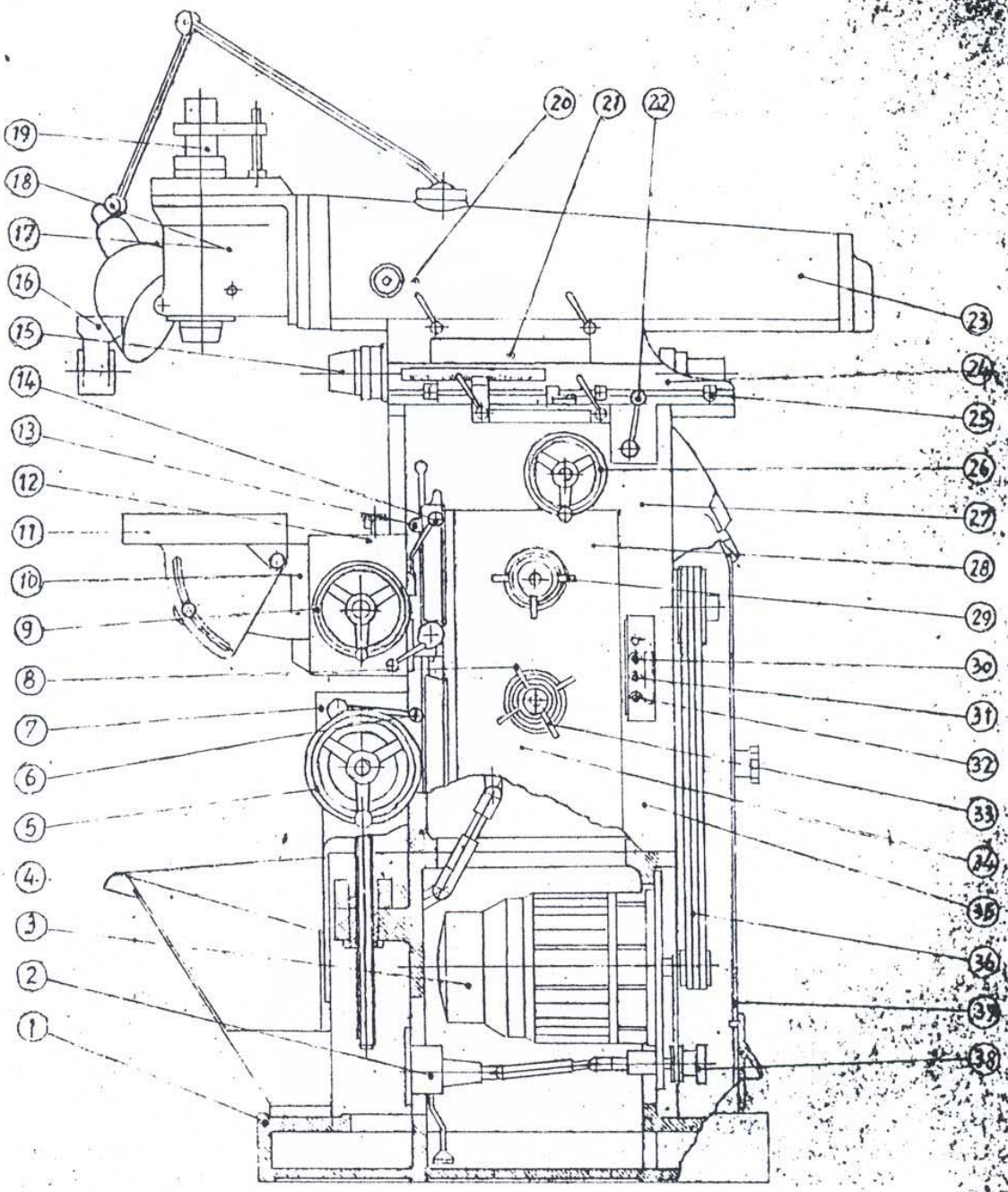
1
2
3
4
5
6
7
8
9
10
11
12
13
14
15
16
17
18
19
20
21
22
23
24
25
26
27
28
29
30
31
32
33
34
35
36
37
38

THIEL DUPLEX 158

Transportation Diagram.

To permit transportation of the machine the upper part of the machine body is provided with a bore approximately at the C.o.G and this hole is covered on both sides with lids.

After removal of those covers a carrier bar of approximately 1.3/8" diameter should be introduced when the machine can be suspended from a rope, always ensuring that suitable wooden blocks are used, as shown so as to avoid damage.

Having raised the machine slightly off the ground it can be levelled up by moving the overarm.

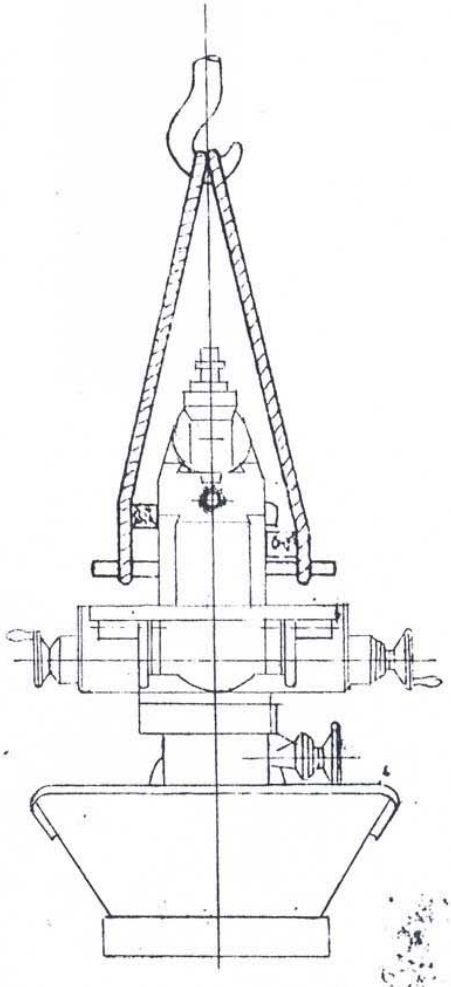

THIEL TYPEN 150
Installation Chart.

Align machine with spirit level but only with table in zero position.

Grout machine in.

Space required: Width approx. 8'. Breadth approx. 7'.

Height approx. 5'

Weight of machine . . . . approx. lbs.

Weight of all attachments approx. lbs.

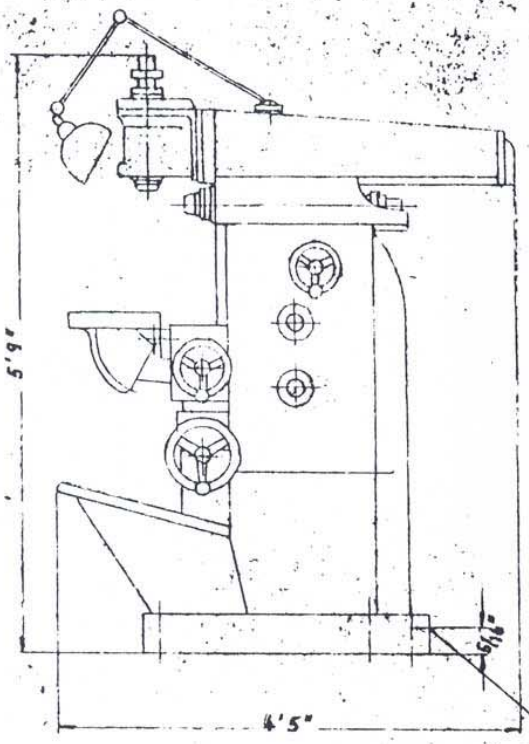

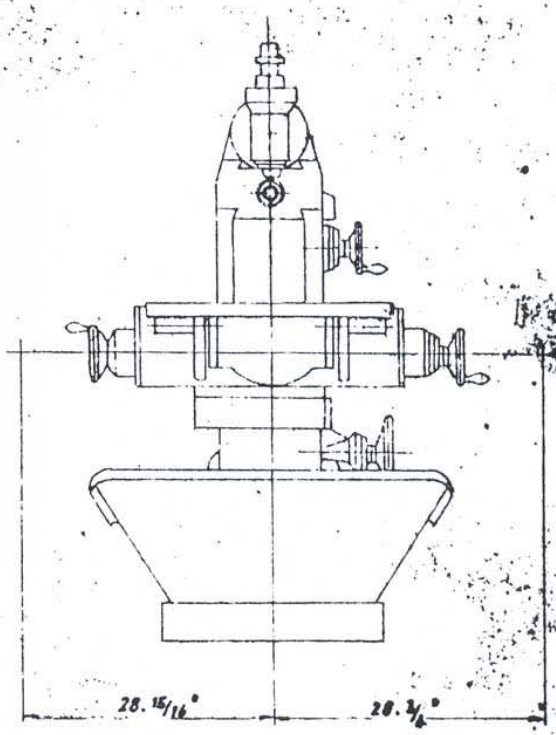

Cable connection, rear

Cable connection, bottom

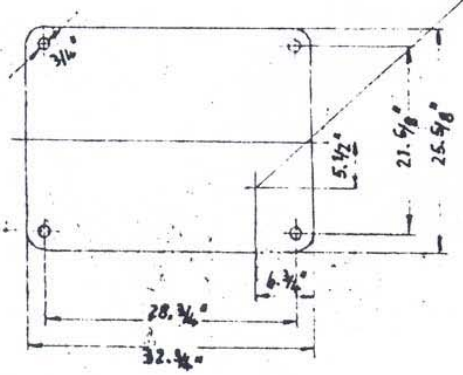

Wiring can be carried out either from the back or from underneath the machine.

THIEL

[illegible] DUPLEX 150
Lubrication Chart.

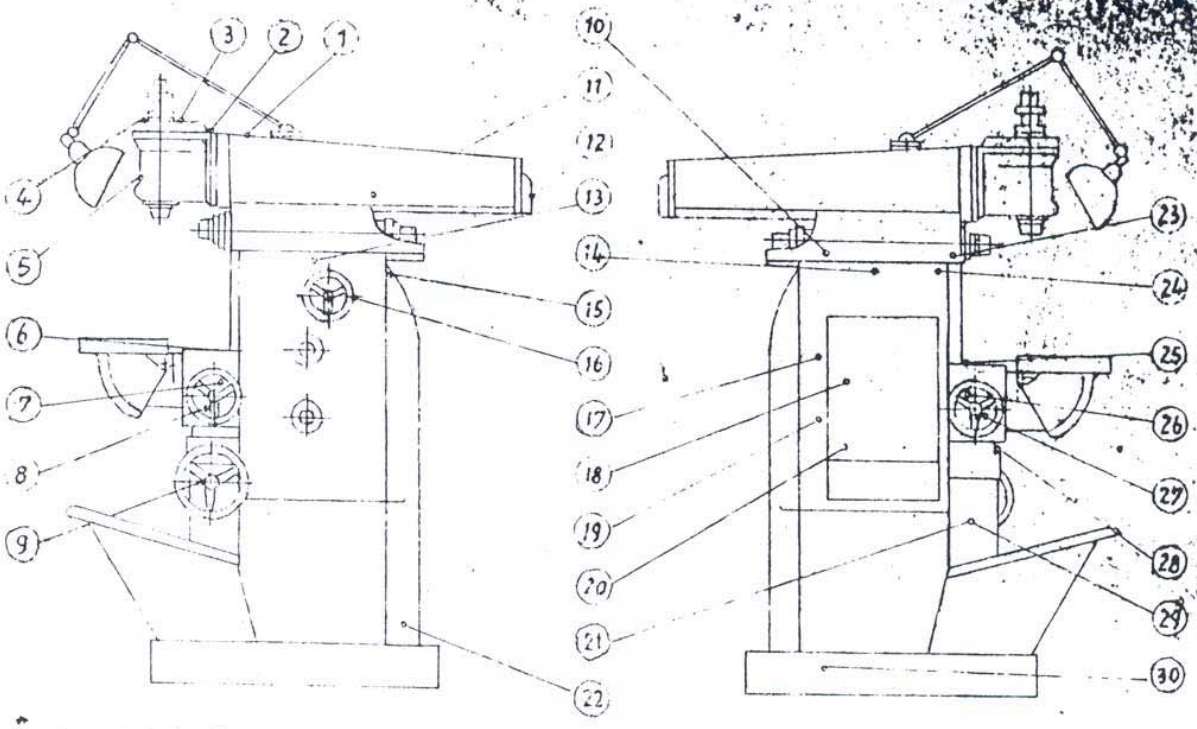

a) Self Lubrication

No.	Position	Type of Oil	Quantity in pints	Oil changes
10	Spindle bearing, rear	LIGHT DYNAMO 183 Shell Dy 1	1/4	Top up
17	Main drive		1	6 monthly
18	Main gear box		4	6 monthly
19	Feed drive		2 1/2	6 monthly
20	Feed gear box		4	6 monthly
23	Spindle bearing, front		1/4	Top up
28	Vertical slide gear box		2 1/2	6 monthly

b) Manual Lubrication

No.	Position	Type of Oil	Frequency	With:
1	Overarm buck	Shell Car Oil X	Once weekly	Oil Gun
2	Vertical head, cone wheels			" "
3	Vertical head, intermediary arbor			" "
4	Vertical head, spindle			" "
5	Vertical head, pinole			" "
6	Vertical slide gear guide, R.H.			" "
7	Longitudinal spindle, R.H.			" "
8	Hand wheel, longitudinal R.H.			" "
9	Hand wheel, vertical			" "
11	Buck in spindle head			" "
12	Overarm drive, rear			" "
13	Spindle head guide, R.H.			" "
14	Spindle head guide, L.H			" "
15	Roller bearing, rear			" "
16	Hand wheel, spindle head			" "
21	Vertical spindle and drive arbor			" "
22	Pump drive			Oil Can
24	Roller bearing, front			Oil Gun
25	Vertical slide guide, L.H.			" "
26	Longitudinal spindle, L.H.			" "
27	Hand wheel, longitudinal L.H.			" "
29	Drive box			" "

c) Coolant

No.	Position	Type of Oil	Quantity	Changes
30	Base	Cutting Oil	Approx. 5 gals.	As required

The horizontal and vertical spindle will mount the same tools as follows:-

In collets: Tools with straight shanks up to 1" diameter.

In reducing sleeves: Tools with taper shank up to MT.3.

On Milling Arbors: (with collet seat or Morse Taper). Milling cutters and slitting saws.

Apart from the above a 2 or 3-Jaw Chuck or the Boring Head Gr.000 can be used. It is also possible to mount a face plate on the external taper of the horizontal spindle.

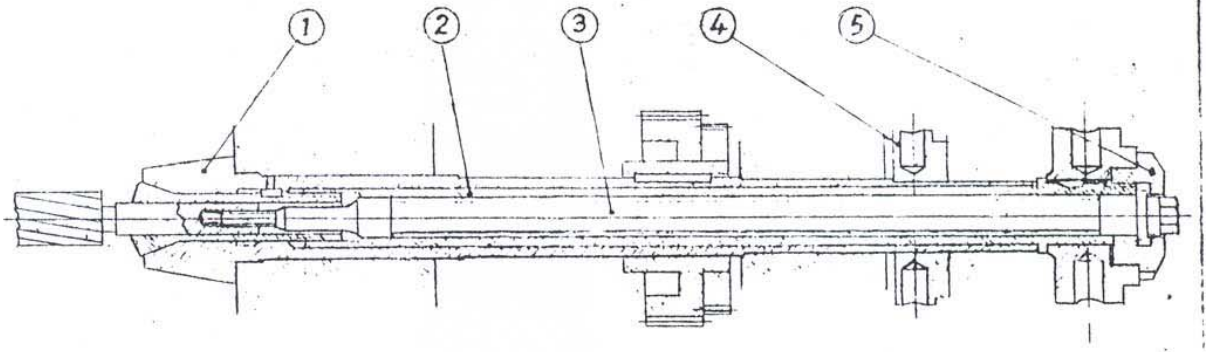

Tool chucking and releasing:

Collets, sleeves, arbors and other tools with collet seating are placed in the spindle (1) and tightened with collet key (2). Whilst doing this the spindle is held by the motor brake.

With right hand spirals and clockwise rotation (right hand cutting) as well as with left hand spirals and anti-clockwise rotation (left hand cutting), cutters with internal threads should be chosen so as to permit their being held by draw-bars (3). This ensures that the cutters are safely held for all types of work and prevented from moving out of the reducing sleeve.

Tools with internal threads are held securely with draw-bar (3) and shroud nut (5) should be applied after chucking. When releasing the tools slacken draw-bar (3). The tool can then be jacked out of the sleeve by means of the draw-bar.

In special cases the spindle can be locked by an arbor being placed into ring (4).

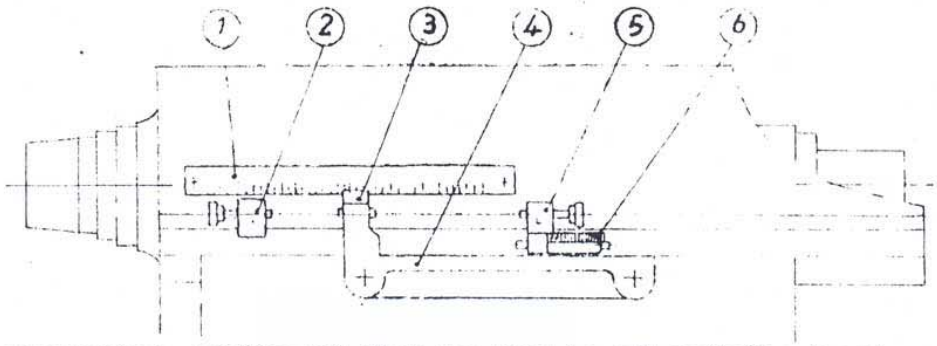

Fine measuring equipment for movements of spindle head, vertical and longitudinal slides of the machine is provided. The equipment consists of precision scale (1), slip gauge support face (4) with vernier (3), adjustable stops (2 and 5) and one each clock indicator (6). The stop (5), simultaneously serves as the clock gauge holder. The slip gauge supports for vertical and longitudinal slide are removable.

Calibrated dials are provided at the hand wheels and make possible the adjustment of measurements to .001". One hand wheel revolution is equivalent to an adjustment of .125".

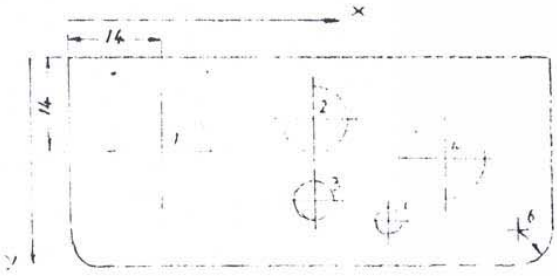

Nr	x	y	⌀	R
1	100	100	16 H7	–
2	122	95	10 H7	–
3	122	107	6 H7	–
4	141	101	12 H7	–
5	133	110	4 H7	–
6	151	111	–	5 R

Instructions

for the production of accurate gauges, templates, dies, patterns etc., on the THIEL DUPLEX 158 using the adjustable boring-head and applying the co-ordinate principle.

On the right of the above drawing a table showing hole diameters, centre distances and radii can be seen. These dimensions are established on the workpiece as follows: after having set the centre position of hole -1- using longitudinal slide and spindle head or alternatively longitudinal slide and vertical slide, the calibrated dials of the table spindles are set to zero and the vernier of the scales are set to a whole number. The figures thus received are entered in the table since further machining of the component uses these figures as a datum. Thus for instance, hole -3- in accordance with the table lies 22 mm in direction -X- and 7 mm in direction -Y. When carrying out the table movements always ensure that the spindles are drawing the table so that any possible backlash will not create dimensional errors. This method makes it possible when employing a boring-head to obtain accurate work using cheap tool bits only. The task will be carried out far more accurately than would be possible with expensive counter-sinking tools or milling cutters.

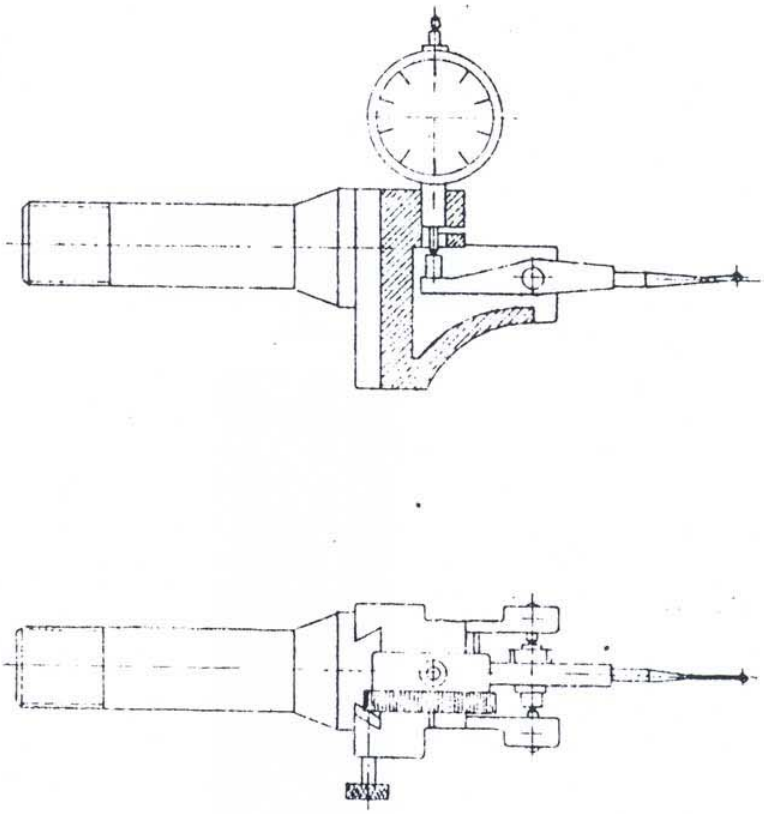

Field of use:

The centring device is held in the vertical or horizontal spindle just like a collet and is locked by means of the normal collet key.

The feeler is brought into contact with the workpiece to be centred or aligned, and the component can then be checked longitudinally or transversely, or bores can be centred. Coarse adjustment is effected by an adjustable Vee slide, and this movement can be used up to 2.3/8" diameter.

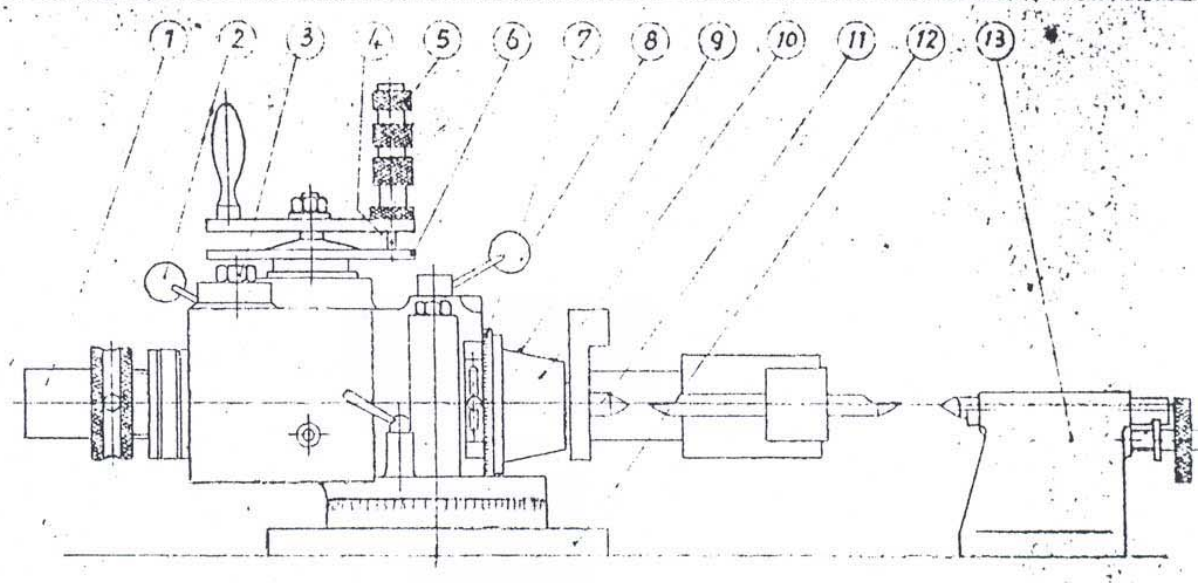

The Dividing Head can be mounted on the worktable or, if additional swivel is necessary, on the Swivel Table (Attachment 3). If the worktable is removed the Dividing Head can also be fitted directly to the longitudinal slide. The Head can be swivelled on the base plate (12) through 360°.

The Dividing Head is suitable for direct and indirect dividing.

Direct indexing is carried out with a fixed index plate (7) having 24 holes and locating plunger, lever (8). The drive engagement must be disconnected by means of screw (3).

Indirect indexing is carried out through a worm drive and using the three index plates (6). Plunger (4) on crank handle (5) engages in the holes of the plates. Prior to machining, position must be locked by means of lever (2). Workpieces can be held in spindle (10) by collets or reducing sleeve and also externally on spindle taper (9) through face plate, 3-jaw chuck etc. Collets reducing sleeves, face plate etc. are the same as those used on horizontal and vertical spindle. Chucking is effected in the same way as on the work spindles (see page 9).

For work between centres a centre (11) with carrier, a tailstock (13) and a centre carrier with length adjustment (1) are provided

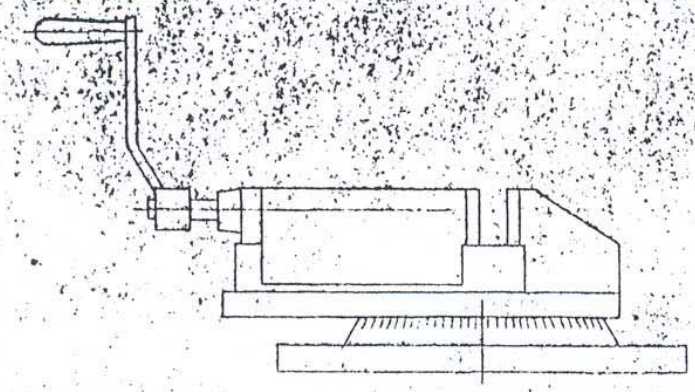

The Vice can be used with or without base plate in horizontal or vertical position. The vice can be swivelled on the base plate through 360°.

Dimensions:	Maximum chucking width	3½"
	Width of jaws	5½"
	Height of jaws	1.3/8"
	Swivels through	360°.

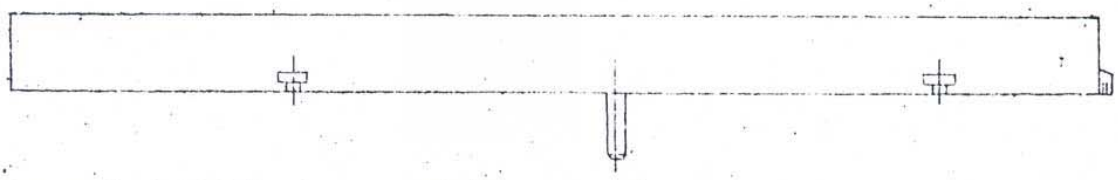

The swivel table is an addition to the worktable and serves primarily to receive the dividing head and tailstock. It can be swivelled to both sides through 10°. In connection with the worktable universal work thus becomes possible. The swivel table is particularly suitable for the machining of long tapered workpieces which are held between dividing head and tailstock centre.

Dimensions:

Working surface	5/8 x 31¼"
Width of 'T' slot	9/16"
Maximum distance between dividing head and tailstock	15"
Centre height of tailstock	4.5/16"

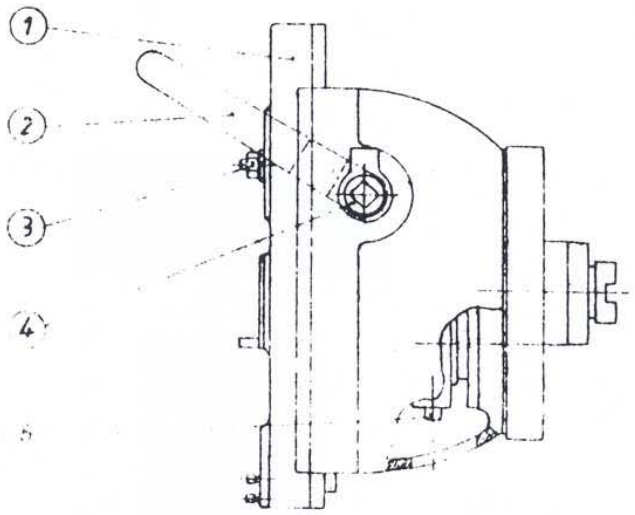

The Slotting Head is arranged for power operated and manual slotting. It has 8 speeds:

Stroke figures: 30, 39, 50, 68, 90, 115, 150, 200 strokes per minute

Lengths of stroke: 3, 3, 2¾, 2¾, 2⅜, 2, 1¾, 1½ strokes in inches

Speeds above 200 strokes per minute must not be selected.

The length of stroke is adjustable from zero to 3⅜" by means of screw (5). It should not exceed the values stated for the stroke figures. In addition to this adjustment the slide (1) can also be moved through 1.9/16" by screw (3).

For manual slotting the drive from the overarm should be disengaged by means of lever (7) (see page 7). After engaging the manual drive by means of lever (4) the slide (1) is actuated with lever (2).

[redacted]

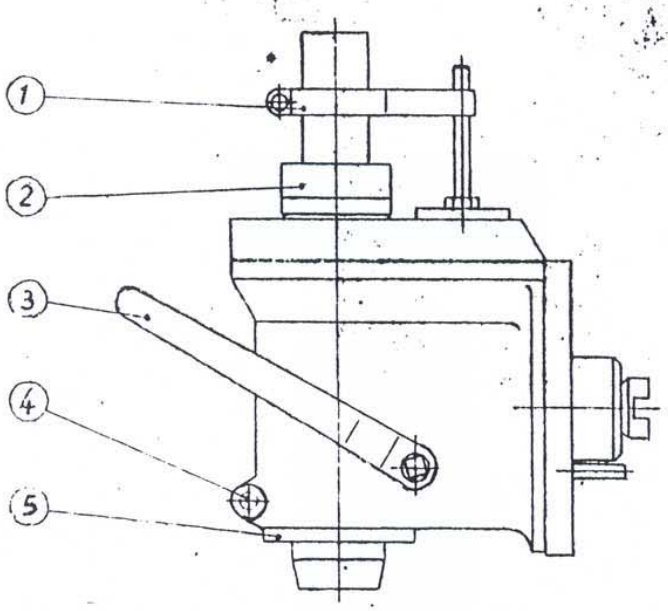

Apart from vertical milling the vertical head can also be used for drilling and manual slotting.

When milling, quill (5) should be locked by means of screw (4).

The same applies when drilling large diameters. The feed is then effected by means of the vertical slide.

When drilling small diameters, however, screw (4) should be loosened very slightly so that the weight of the quill does not rest on the drill, but sufficiently to permit movement of quill (5) by means of lever (3) with sensitive control. The ring (2) serves as a stop.

When using the head for slotting, ring (1) should be utilised and the quill lever operated.

The same tools as those used for the horizontal spindle can be used in the vertical spindle.

Chucking and releasing of tools is described on page 9.

Circular Table (Attachment 6).

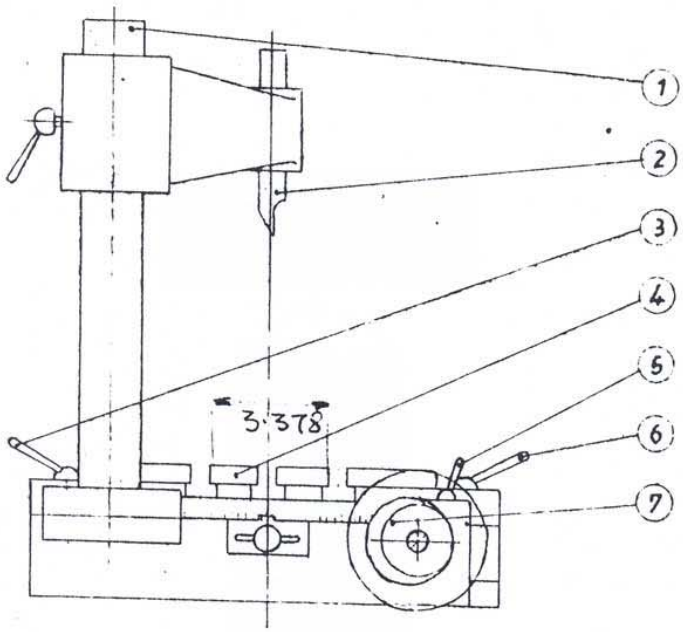

The Circular Table serves to receive components where round work is to be undertaken. The removable steady (1) with adjustable centre (2) permits rapid alignment and check upon radii. Worktable (4) has 360° division and can be locked in position by levers (3 and 6). For rapid rotation of the table the worm drive can be disconnected. To effect this, loosen lever (5) and rotate eccentric bush (7) anti-clockwise. Clockwise rotation re-engages the worm.

If axial play arises, the worm can be re-adjusted.

Dimensions:

Working surface	10" diameter
Width of 'T' slot	9/16"
Maximum distance between table surface and centre .	9½"

THIEL-DUPLEX 158

Indexing table for Circular Table RT 380

Ratio of indexing head: 1 : 120

Index plate: 17, 24, 29, 37, 42, 49, 57, 63
19, 27, 30, 33, 41, 47, 53, 61
23, 25, 28, 31, 33, 43, 51, 59

Index number	Indexing plate	Revolution of index handle	Holes in index plate	Index number	Indexing plate	Revolution of index handle	Holes in index plate	Index number	Indexing plate	Revolution of index handle	Holes in index plate	Index number	Indexing plate	Revolution of index handle	Holes in index plate	Index number	Indexing plate	Holes in index plate	Index number	Indexing plate	Holes in index plate
2	—	60	—	35	28	3	12	72	63	1	42	116	29	1	1	184	23	15	270	27	12
3	—	40	—	36	63	3	21		27	1	18	117	39	1	1	185	37	24	276	23	10
4	—	30	—		33	3	11	74	37	1	23	118	59	1	1	186	31	20	280	63	27
5	—	24	—		51	3	17	75	[illegible]	1	[illegible]	120	—	1	—	188	47	30		28	12
6	—	20	—	37	37	3	9		25	1	5	122	61	—	60	189	63	[illegible]	282	47	20
7	63	17	9	38	57	3	9	76	57	1	33	123	41	—	40	190	57	36	285	57	24
	28	17	4	39	39	3	3		19	1	11	124	31	—	30		19	12		19	8
8	—	15	—	40	—	3	—	78	39	1	21	125	25	—	[illegible]	192	24	15	288	24	10
9	63	13	21	41	41	2	38	[illegible]	42	1	21	126	63	—	60	195	39	24	290	29	12
	27	13	9	42	63	2	54		33	1	15	12[illegible]	43	—	40	196	49	30	294	49	20
10	—	12	—		28	2	24		28	1	14	130	39	—	36	198	33	20	295	59	24
11	33	10	30	43	43	2	34	81	27	1	13	132	33	—	30	200	30	18	296	37	15
12	—	10	—	44	33	2	24	82	41	1	19	135	63	—	56		25	15	300	30	12
13	39	9	9	45	63	2	42	84	63	1	27		27	—	24	204	17	10	301	41	24
14	42	8	24		33	2	22		28	1	12	[illegible]	17	—	15		51	30	306	51	20
	28	8	16		51	2	34	85	17	1	7		51	—	45	205	41	24	[illegible]	31	12
15	—	8	—	46	23	2	14		51	1	21	138	23	—	20	210	63	[illegible]	312	39	15
16	42	7	21	47	47	2	26	86	43	1	17	140	63	—	54		28	16	315	63	24
	30	7	15	48	42	2	21	87	29	1	11		28	—	24	212	53	30	318	53	20
	28	7	14		30	2	15	88	33	1	12	141	47	—	40	215	43	24	320	24	9
17	17	7	1		28	2	14		[illegible]	1	21	144	[illegible]	—	35	216	63	35	324	27	10
	51	7	3	49	49	2	22		33	1	11		3[illegible]	—	25		27	15	328	41	15
18	42	6	28	50	30	2	12		51	1	17	145	29	—	24	220	33	18	330	33	12
	33	6	22		25	2	10	92	23	1	7	147	49	—	40	222	37	20	336	28	10
	51	6	34	51	17	2	6	93	31	1	9	148	37	—	30	224	28	15	340	17	6
19	57	6	18		51	2	18	94	47	1	13	150	30	—	24	225	30	16	342	57	20
	19	6	6	52	39	2	12	95	57	1	15		25	—	20	228	57	30	344	43	15
20	—	6	—	53	53	2	14		19	1	5	152	57	—	45		19	10	345	23	8
21	63	5	45	54	63	2	14	96	24	1	6		19	—	15	230	23	12	348	29	10
	28	5	20		27	2	6		28	1	7	153	51	—	40	232	29	15	354	59	20
22	33	5	15	55	33	2	6	98	49	1	11	155	31	—	24	234	39	20	360	63	21
23	23	5	5	56	33	2	9	99	33	1	7	156	39	—	30	235	47	24		33	11
24	—	5	—		28	2	4	100	30	1	6	159	53	—	40	236	59	30	366	61	20
25	30	4	24	57	57	2	6		25	1	5	160	24	—	18	240	42	[illegible]	370	37	12
	25	4	20		19	2	2	102	17	1	3		28	—	21		30	15	372	31	10
26	39	4	24	58	29	2	2		51	1	9	162	27	—	20		28	14	375	25	6
27	63	4	28	59	59	2	[illegible]	104	39	1	6	164	41	—	30	244	61	30	376	47	15
	27	4	12	60	—	2	—	105	63	1	9	168	33	—	24	245	49	24	378	63	20
28	63	4	18	61	61	1	59		28	1		168	63	—	45	246	41	20	380	57	18
	28	4	8	62	31	1	29	106	53	1			28	—	20	248	31	15	—	19	6
29	29	4	4	63	63	1	57	108	63	1	[illegible]	170	51	—	36	250	25	12	390	39	12
30	—	4	—	64	24	1	21		27	1	3	171	57	—	40	252	42	20	392	49	15
31	31	3	27	65	39	1	33	110	33	1	3	172	43	—	30	255	17	8	396	33	10
32	24	3	18	66	33	1	27	111	37	1	3	174	29	—	20		51	24	400	31	9
	28	3	21	68	17	1	13	112	42	1	3	177	59	—	40	258	43	20			
33	33	3	21		51	1	39		28	1	2	180	63	—	42	260	39	18			
34	17	3	9	69	23	1	17	114	57	1	3		33	—	23	264	33	15			
	51	3	27	70	63	1	45		19	1	1		51	—	34	265	53	24			
35	63	3	27		28	1	20	115	23	1	[illegible]	183	61	—	40	270	63	28			

Gebr. Thiel G.m.b.H., Sa[illegible] Bez. Kassel

THIEL-DUPLEX 158

Indexing Table

for

Rotary-Horizontal-Dividing Head DHT 110

Ratio of indexing head: 1 : 40

Index plate: 17, 24, 29, 37, 42, 49, 57, 63
19, 27, 30, 33, 41, 47, 53, 61
23, 25, 28, 31, 39, 43, 51, 59

Index number	Indexing plate	Revolution of index handle	Holes in index plate	Index number	Indexing plate	Revolution of index handle	Holes in index plate	Index number	Indexing plate	Holes in index plate	Index number	Indexing plate	Holes in index plate	Index number	Indexing plate	Holes in index plate	Index number	Indexing plate	Holes in index plate
2	—	20	—	25	30	1	18	52	39	30	92	23	10	152	19	5	244	61	10
3	63	13	21		25	1	15	53	53	40	94	47	20	155	31	8	245	49	8
	33	13	11	26	39	1	21	54	27	20	95	19	8	156	39	10	248	31	5
	39	13	13	27	27	1	13	55	33	24	96	24	10	160	24	6	250	25	4
4	—	10	—	28	63	1	27	56	63	45	98	49	20		28	7	252	63	10
5	—	8	—		28	1	12		28	20	100	30	12	164	41	10	255	51	8
6	63	6	42	29	29	1	11	57	57	40		25	10	165	33	8	260	39	6
	33	6	22	30	63	1	21	58	29	20	102	51	20	168	63	15	264	33	5
	39	6	26		33	1	11	59	59	40	104	39	15	170	17	4	265	53	8
7	63	5	45		39	1	13	60	63	42	105	63	24		51	12	270	27	4
	28	5	20	31	31	1	9		33	22	106	53	20	172	43	10	280	63	9
8	—	5	—	32	24	1	6		51	36	108	27	10	180	63	14		28	4
9	27	4	12		28	1	7	61	61	40	110	33	12		27	6	285	57	8
10	—	4	—	33	33	1	7	62	31	20	112	42	15	184	23	5	290	29	4
11	33	3	21	34	17	1	3	63	63	40		28	10	185	37	8	295	59	8
12	63	3	21		51	1	9	64	84	15	114	57	20	188	47	10	296	37	5
	33	3	11	35	63	1	9	65	39	24	115	23	8	190	57	12	300	30	4
	39	3	13		28	1	4	66	33	20	116	29	10		19	4	305	61	8
13	39	3	3	36	27	1	3	68	17	10	118	59	20	192	24	5	310	31	4
14	63	2	54	37	37	1	3		51	30	120	63	21	195	39	8	312	39	5
	28	2	24	38	57	1	3	70	63	36		33	11	196	49	10	315	63	8
15	63	2	42		19	1	1		28	16		51	17	200	25	5	320	24	3
	33	2	22	39	39	1	1	72	27	15	122	61	20	204	51	10	328	41	5
	51	2	34	40	—	1	—	74	37	20	124	31	10	205	41	8	330	33	4
16	42	2	21	41	41	—	40	75	30	16	125	25	8	210	63	12	336	42	5
17	17	2	6	42	63	—	60	76	57	30	126	63	20	212	53	10	340	17	2
	51	2	18	43	43	—	40		19	10	130	39	12	215	43	8		51	6
18	27	2	6	44	33	—	30	78	39	20	132	33	10	216	27	5	344	43	5
19	57	2	6	45	27	—	24	80	42	21	135	27	8	220	33	6	360	63	7
	19	2	2	46	23	—	20		30	15	136	17	5	224	28	5		27	3
20	—	2	—	47	47	—	40	82	41	20		51	15	228	57	10	370	37	4
21	63	1	57	48	42	—	35	84	63	30	140	63	18	230	23	4	376	47	5
22	33	1	27		30	—	25	85	17	8		28	8	232	29	5	380	57	6
23	23	1	17	49	49	—	40		51	24	145	29	8	235	47	8		19	2
24	63	1	42	50	30	—	24	86	43	20	148	37	10	236	59	10	390	39	4
	33	1	22		25	—	20	88	33	15	150	30	8	240	42	7	392	49	5
	51	1	34	51	51	—	40	90	27	12	152	57	15		30	5	400	30	3

Gebr. Thiel G.m.b.H., Sand Bez. Kassel

THIEL DUPLEX 158

UNIVERSAL TOOLROOM MILLING MACHINE

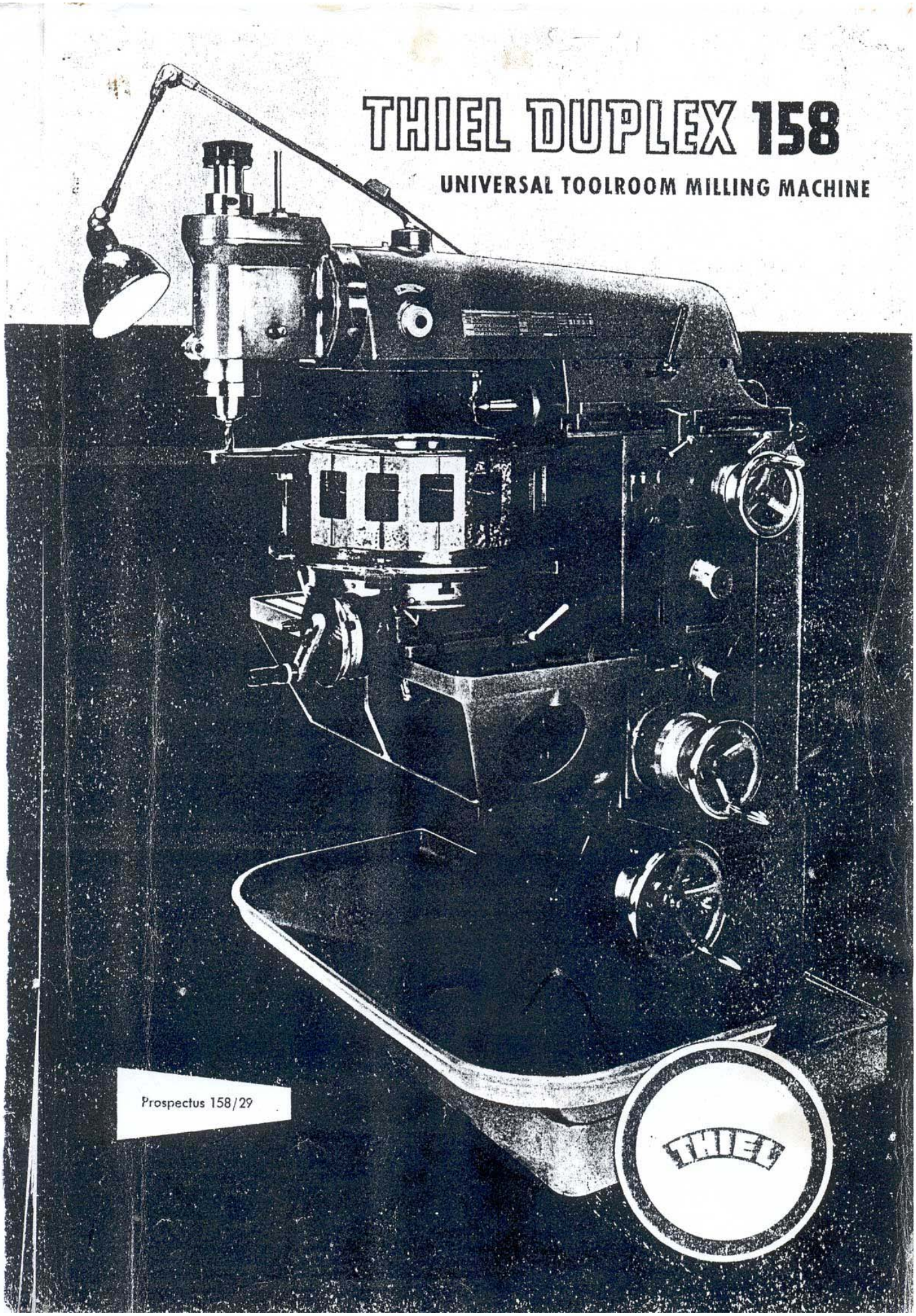

Prospectus 158/29

THIEL

R E P L A C E M E N T P A R T S

for THIEL UNIVERSAL MILLING MACHINE

TYPE DUPLEX 158 S

Replacement Parts for
THIEL-DUPLEX-158

Thiel Ref. No.	Description	Manufacturer
TH 001	Ball Bearing 3201 DIN 628	SKF Schweinfurt Germany
TH 002	Ball Bearing 3202 DIN 628	" " "
TH 003	Ball Bearing 3203 DIN 628	" " "
TH 004	Ball Bearing 3304 DIN 628	" " "
TH 005	Ball Bearing 51104 DIN 711	" " "
TH 007	Ball Bearing 51111 DIN 711	" " "
TH 008	Ball Bearing 51203 DIN 711	" " "
TH 009	Ball Bearing 51205 DIN 711	" " "
TH 011	Ball Bearing 6001 DIN 625	" " "
TH 012	Ball Bearing 6002 DIN 625	" " "
TH 013	Ball Bearing 6003 DIN 625	" " "
TH 014	Ball Bearing 6004 DIN 625	" " "
TH 015	Ball Bearing 6005 DIN 625	" " "
TH 016	Ball Bearing 6006 DIN 625	" " "
TH 017	Ball Bearing 6007 DIN 625	" " "
TH 018	Ball Bearing 6009 DIN 625	" " "
TH 021	Ball Bearing 6202 DIN 625	" " "
TH 022	Ball Bearing 6203 DIN 625	" " "
TH 023	Ball Bearing 6204 DIN 625	" " "
TH 024	Ball Bearing 6205 DIN 625	" " "
TH 025	Ball Bearing UK 55	UKF Berlin "
TH 026	Ball Bearing UK 60	" " "

Replacement Parts for
THIEL-DUPLEX-158

Thiel Ref. No.	Description	Manufacturer
TH 027	Ball Bearing 6201 DIN 625	SKF Schweinfurt Germany
TH 028	Ball Bearing 3205 DIN 628	" " "
TH 029	Ball Bearing 6204Z DIN 625	Müller Nürnberg "
TH 030	Ball Bearing 6005Z DIN 625	" " "
TH 031	Ball Bearing 51106 DIN 711	SKF Schweinfurt "
TH 032	Ball Bearing 6012 DIN 625	" " "
TH 033	Ball Bearing ALN 17	RIV Frankfurt/Main "
TH 034	Ball Bearing 51100 DIN 711	SKF Schweinfurt "
TH 035	Ball Bearing 51102 DIN 711	" " "
TH 036	Ball Bearing 51109 DIN 711	" " "
TH 037	Roller Bearing NN 3011 XKMSP	" " "
TH 038	Ball Bearing 2200 DIN 630	" " "
TH 39	Ball Bearing 16008 DIN 625	" " "
TH 40	Comb. Needle-Ball Bearing NKX 25	Schaeffler Herzogenaurach "

Replacement Parts for
THIEL-DUPLEX-158

Thiel Ref. No.	Description	Manufacturer
TH 040	Oil Seal A 40 x 52 x 7	Freudenberg, Simritwerk Weinheim Germany
TH 041	Oil Seal A 35 x 47 x 7	"
TH 042	Oil Seal A 32 x 45 x 7	"
TH 043	Oil Seal A 30 x 40 x 7	"
TH 044	Oil Seal A 28 x 42.9 x 9.5	"
TH 046	Oil Seal A 25 x 38 x 7	"
TH 047	Oil Seal A 25 x 35 x 7	"
TH 048	Oil Seal A 24 x 42 x 10	"
TH 049	Oil Seal A 22 x 40 x 10	"
TH 050	Oil Seal A 22 x 35 x 7	"
TH 051	Oil Seal A 20 x 42 x 10	"
TH 052	Oil Seal A 20 x 40 x 7	"
TH 053	Oil Seal A 20 x 32 x 7	"
TH 054	Oil Seal A 20 x 30 x 7	"
TH 056	Oil Seal A 17 x 28 x 6	"
TH 057	Oil Seal A 16 x 28 x 7	"
TH 058	Oil Seal A 33 x 45 x 7	"
TH 059	Oil Seal A 22 x 32 x 7	"
TH 060	Oil Seal A 18 x 32 x 7	"
TH 061	Oil Seal A 36 x 52 x 9	"
TH 062	Oil Seal Simrit-O 24.2 x 3.0	"
TH 063	Oil Seal A 35 x 47 x 10	"

Replacement Parts for
THIEL-DUPLEX-158

Thiel Ref. No.	Description	Manufacturer	
TH 080	Fuses 10A 500V	Siemens	Germany
TH 081	Oil show glass SK 9 M	Kuhn, Stuttgart	"
TH 082	Oil show glass SK 12 M	" "	"
TH 084	Ball joint E 20	Loewe, Berlin	"
TH 085	V-belt "Blauri" (Main Drive) 13 x 8 x 1475	Flender, Bocholt	"
TH 086	V-belt "Blauri" 8 x 5 x 475	" "	"
TH 087	Shear pin 3.5 ø SLOTTING ATTCH	Junghans, Schramberg	"
TH 088 X2	Shear pin 2.8 ø FEED MECHANISM	"	"
TH 089	Bellows, right	Freudenberg, Simritwerk Weinheim	"
TH 090	Bellows, left	Hennig, München	"
TH 091	Bellows, front		
TH 092	Fuses 4A 500V	Siemens	"
TH 093	Fuses 2A 500V	"	"
TH 094	V-belt "Blauri" (Feed Drive) 13 x 8 x 630	Flender, Bocholt	"
TH 095	Multiple disc clutch Type 105-11	Ortlinghaus Wermelskirchen/Rhld.	"
TH 096	Shear pin 2.0 ø FEED MECHANISM ON VERTICAL SPINDLE	Junghans, Schramberg	"

Replacement Parts for THIEL-DUPLEX-158

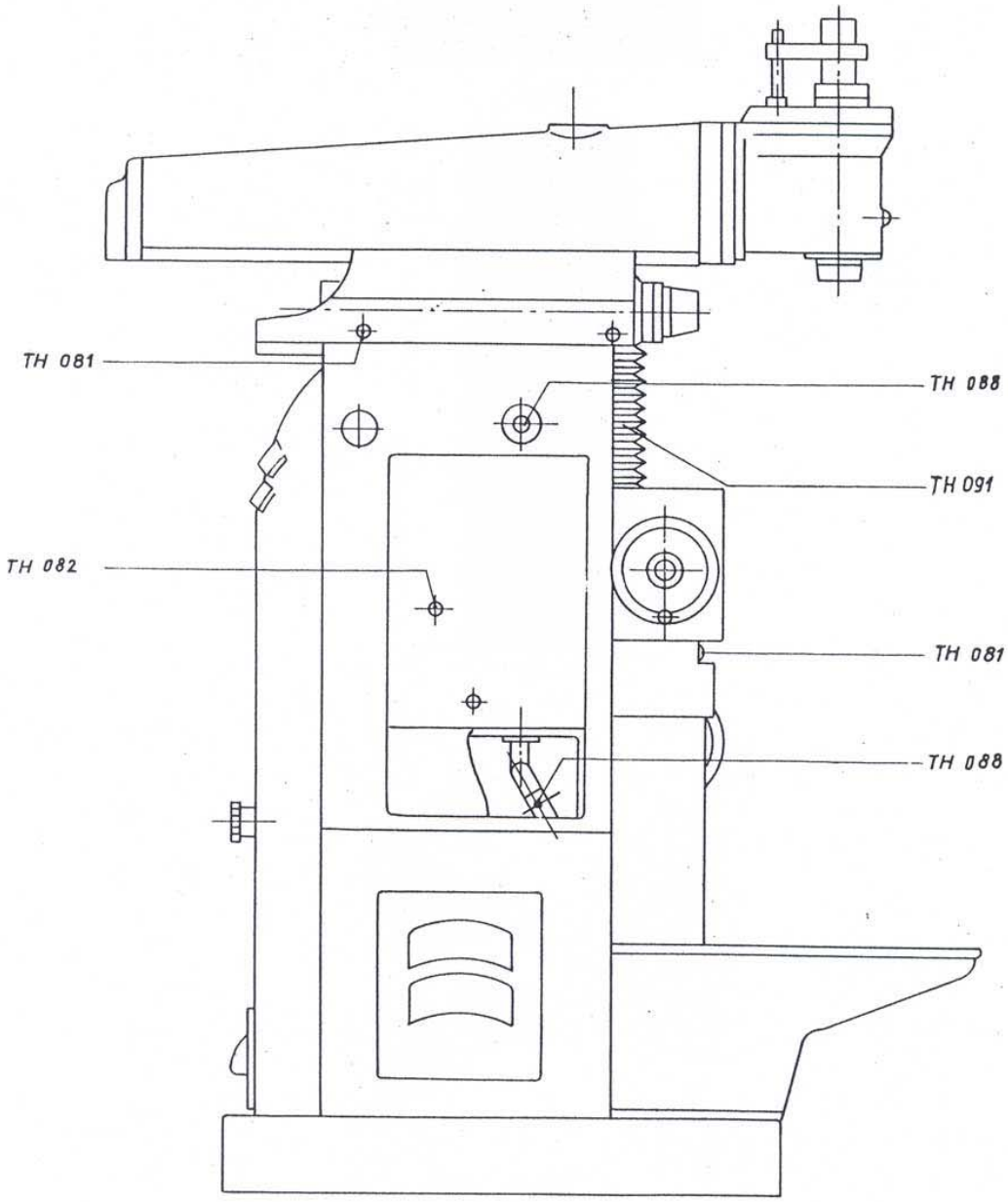

THIEL Ref. No.	Description	Manufacturer	THIEL Ref. No.	Description	Manufacturer
TH 0 82	Oil show glass SK 12M	Kuhn, Stuttgart	TH 0 91	Bellows, front	Hennig, München
TH 0 81	Oil show glass SK 9M	Kuhn, Stuttgart	TH 0 88	Shear pin 2,8ø	Junghans, Schramberg

Replacement Parts for THIEL-DUPLEX-158

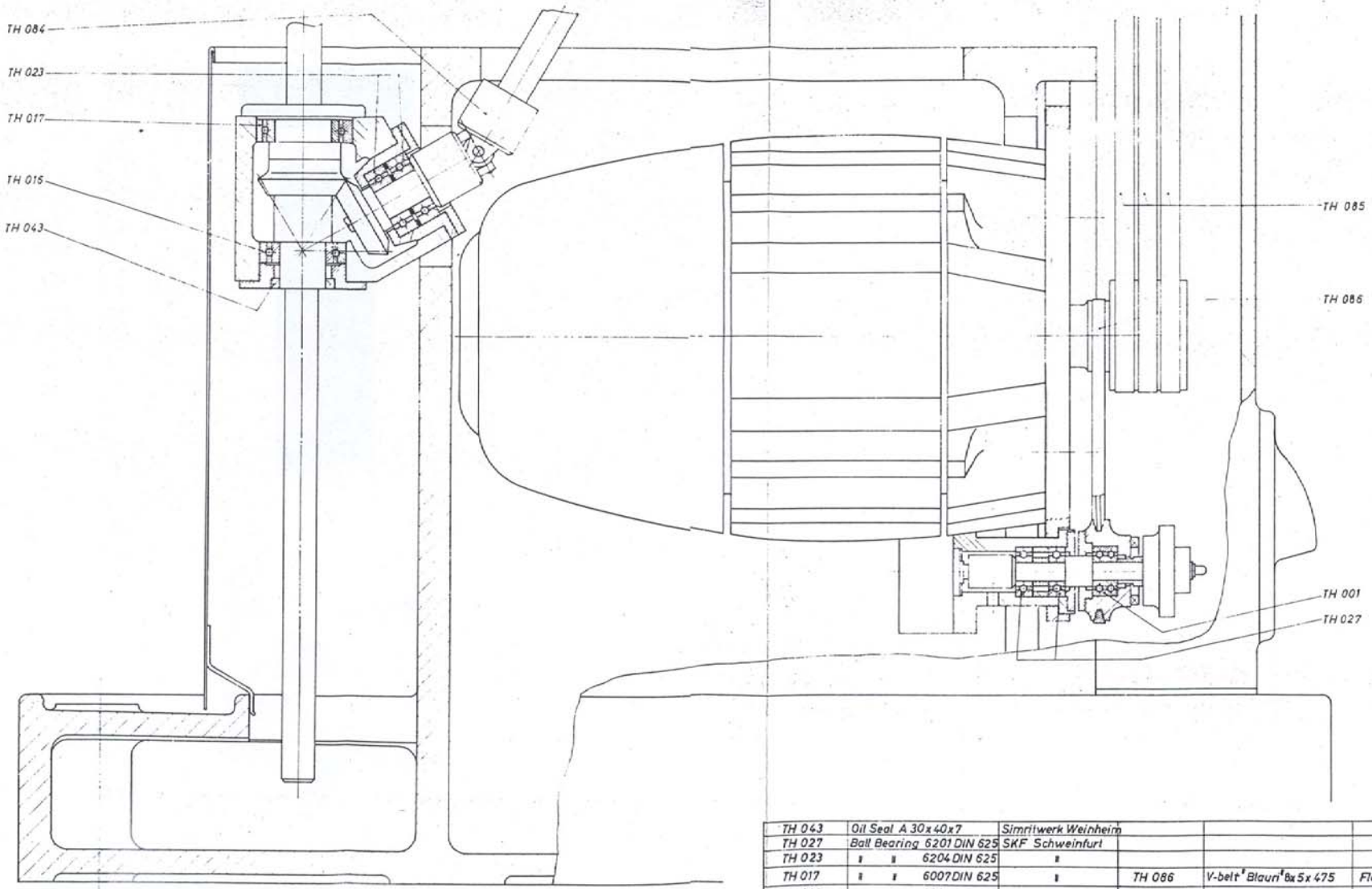

THIEL Ref. No:	Description	Manufacturer	THIEL Ref. No:	Description	Manufacturer
TH 043	Oil Seal A 30x40x7	Simritwerk Weinheim			
TH 027	Ball Bearing 6201 DIN 625	SKF Schweinfurt			
TH 023	" " 6204 DIN 625	"			
TH 017	" " 6007 DIN 625	"	TH 086	V-belt "Blaun" 8x5x475	Flender, Bocholt
TH 016	" " 6006 DIN 625	"	TH 085	" " (Main Drive) 13x9x1475	" "
TH 001	" " 3201 DIN 628	"	TH 084	Ball joint E 20	Loewe, Berlin

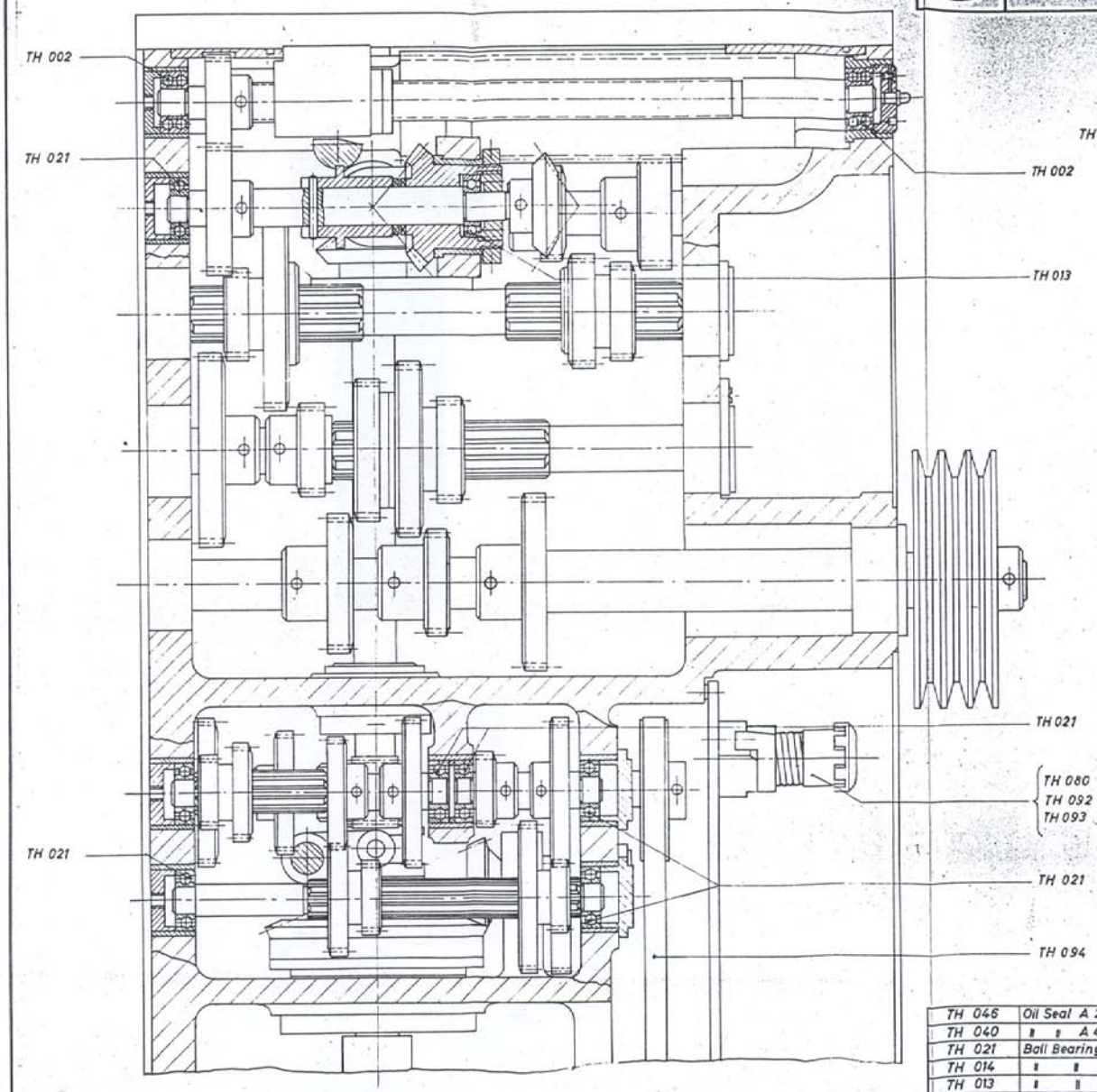

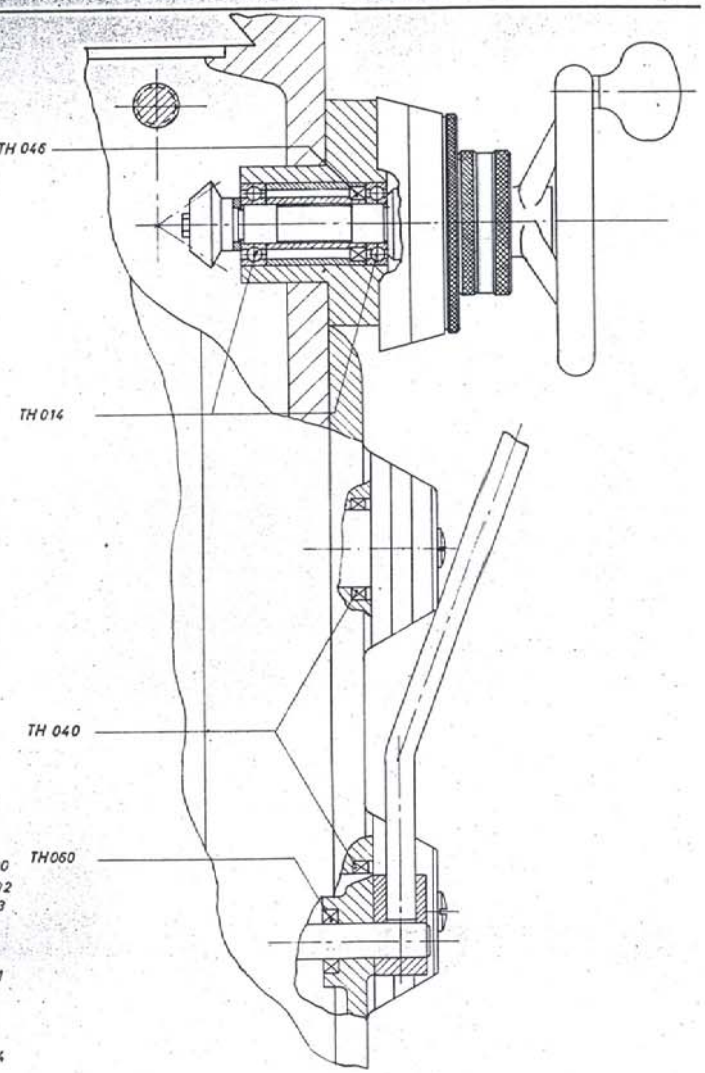

THIEL Ref. No:	Description	Manufacturer	THIEL Ref. No:	Description	Manufacturer
TH 046	Oil Seal A 25x38x7	Simritwerk, Weinheim			
TH 040	" " A 40x52x7	" "	TH 094	V-belt "Blauri" (Feed Drive)	Flender, Bocholt
TH 021	Ball Bearing 6202 DIN625	SKF, Schweinfurt	TH 093	Fuses 2 A 500 V	Siemens
TH 014	" " 6004 DIN625	"	TH 092	" 4 A 500 V	"
TH 013	" " 6003 DIN625	"	TH 080	" 10 A 500 V	"
TH 002	" " 3202 DIN628	"	TH 060	Oil Seal A 18x32x7	Simritwerk, Weinhei

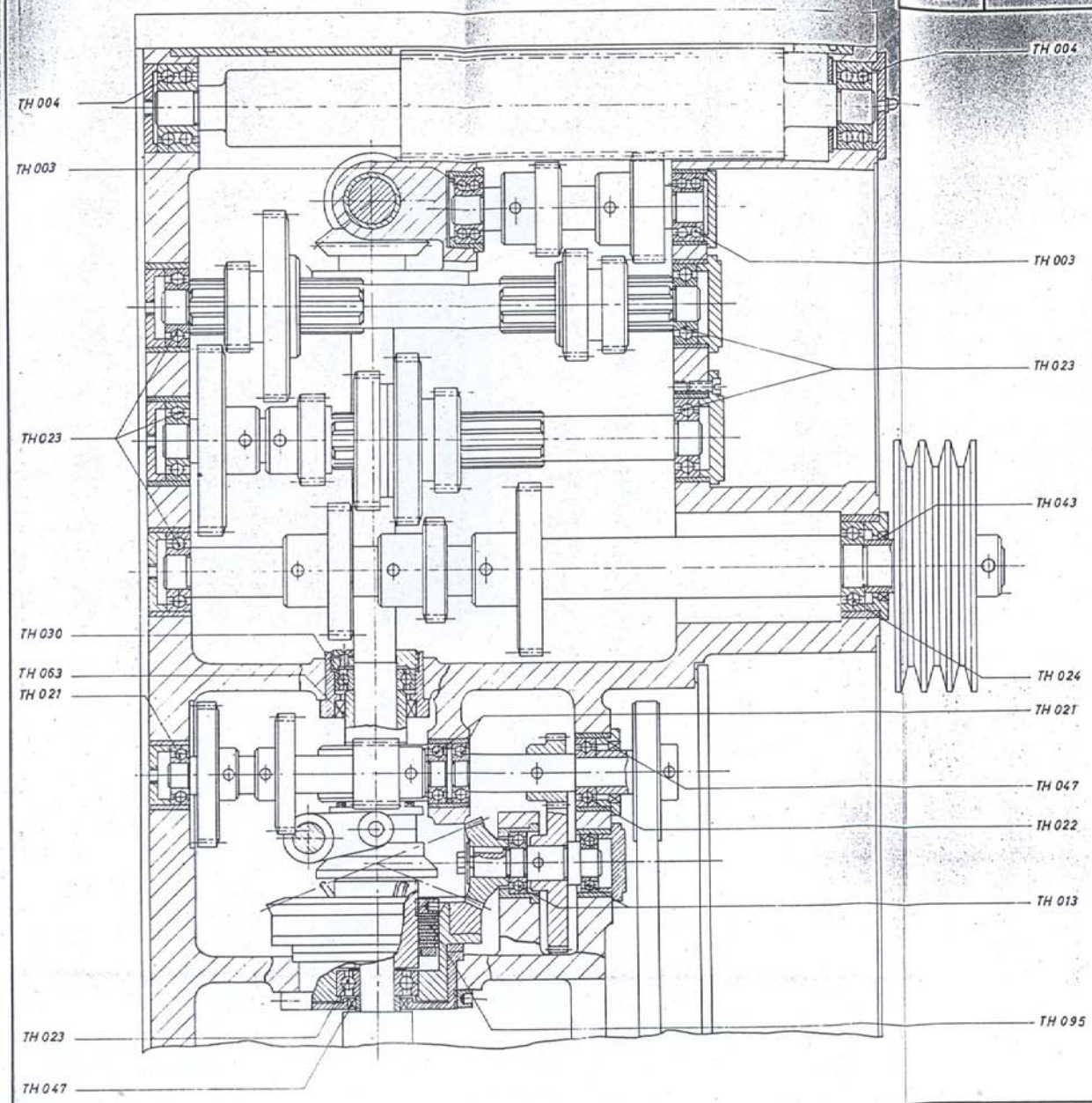

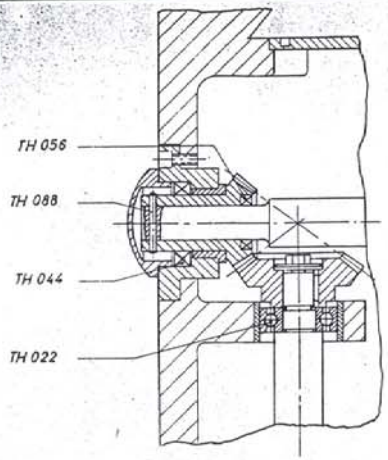

TH 095	Multiple disc clutch Type 105-11	Ortlinghaus, Wermels
TH 088	Shear pin 2,8 ϕ	Junghans, Schramberg
TH 063	Oil Seal A 35x47x10	Simmitwerk, Weinheim
TH 056	" A 17x28x6	" "
TH 047	" A 25x35x7	" "
TH 044	" A 28x42,9x9,5	" "
TH 043	" A 30x40x7	" "
TH 030	Ball Bearing 6005ZDIN 625	Müller, Nürnberg
TH 024	" " 6205 DIN 625	SKF, Schweinfurt
TH 023	" " 6204 DIN 625	"
TH 022	" " 6203 DIN 625	"
TH 021	" " 6202 DIN 625	"
TH 013	" " 6003 DIN 625	"
TH 004	" " 3304 DIN 628	"
TH 003	" " 3203 DIN 628	"
THIEL Ref. No:	Description	Manufacturer

Replacement Parts for THIEL-DUPLEX-158 (Machine without rapid traverse)

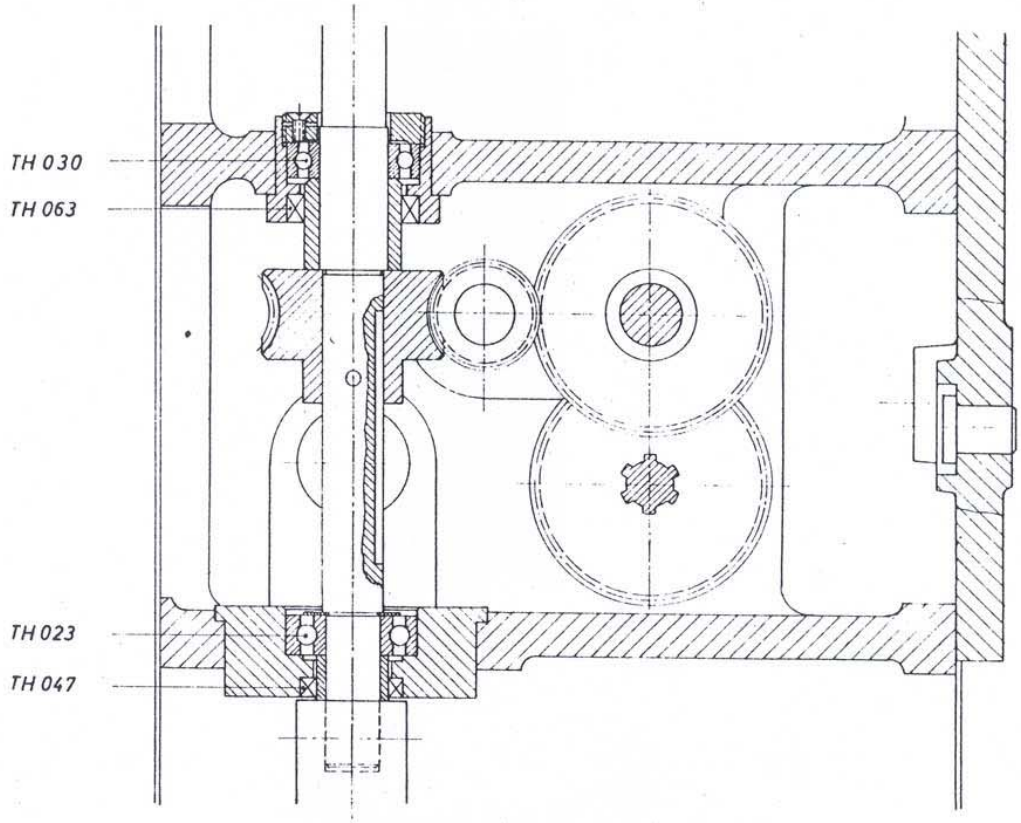

THIEL Ref. No.	Description	Manufacturer
TH 063	Oil Seal A 35 x 47 x 10	Simritwerk Weinheim
TH 047	" " A 25 x 35 x 7	" "
TH 030	Ball Bearing 6005 Z DIN 625	Müller, Nürnberg
TH 023	" " 6204 DIN 625	SKF Schweinfurt

Replacement Parts for THIEL-DUPLEX-158

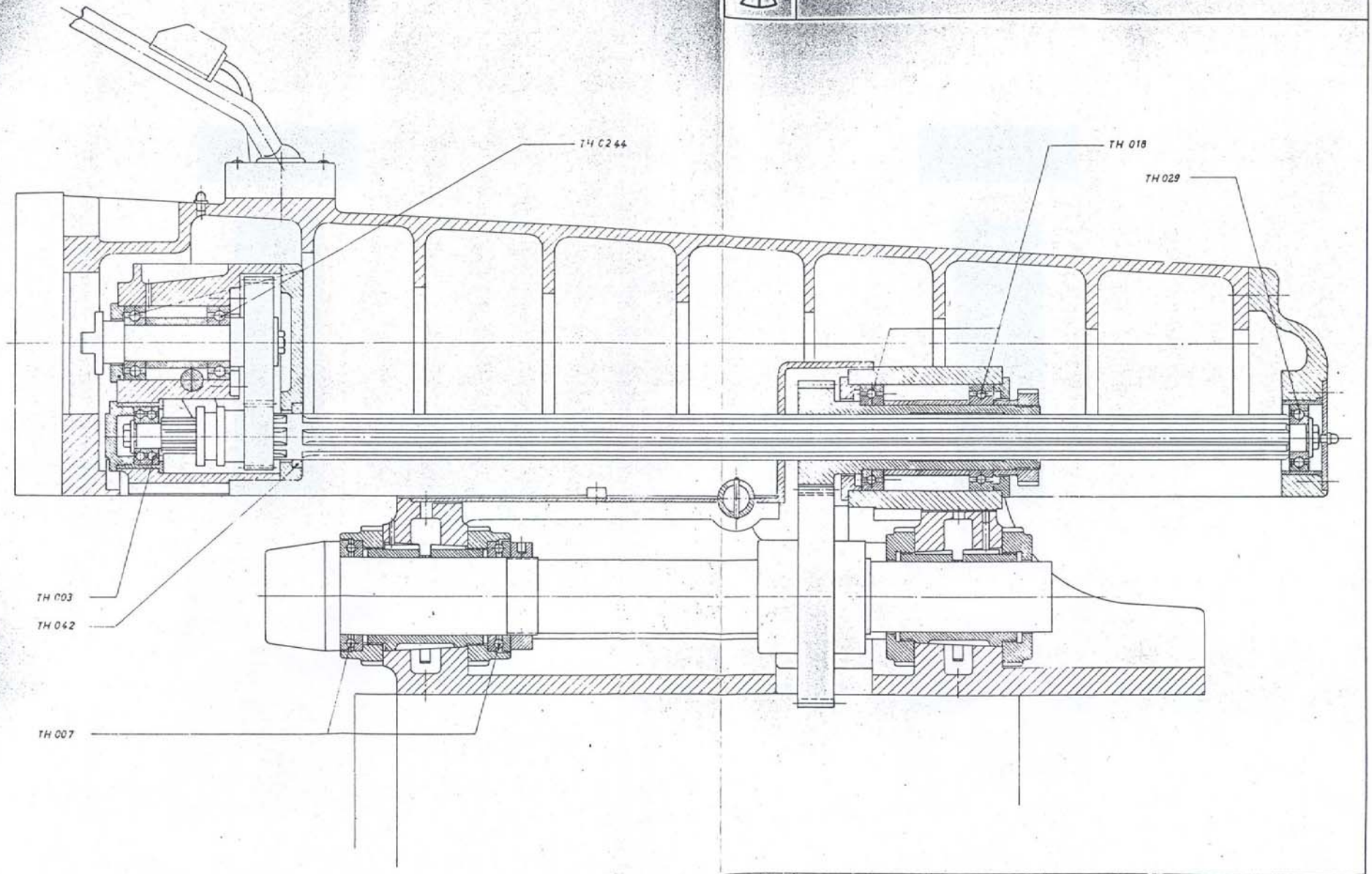

THIEL Ref. No:	Description	Manufacturer	THIEL Ref. No:	Description	Manufacturer
TH 018	Ball Bearing 6009 DIN 625	SKF, Schweinfurt	TH 042	Oil Seal A 32x45x7	Simritwerk, Weinheim
TH 007	" " 51111 DIN 711	"	TH 029	Ball Bearing 6204 Z DIN625	Müller, Nürnberg
TH 003	" " 3203 DIN 628	"	TH 024	" " 6205 DIN 625	SKF, Schweinfurt

Replacement Parts for THIEL-DUPLEX-158
Vertical Drilling and Milling Head (Attachment 5)

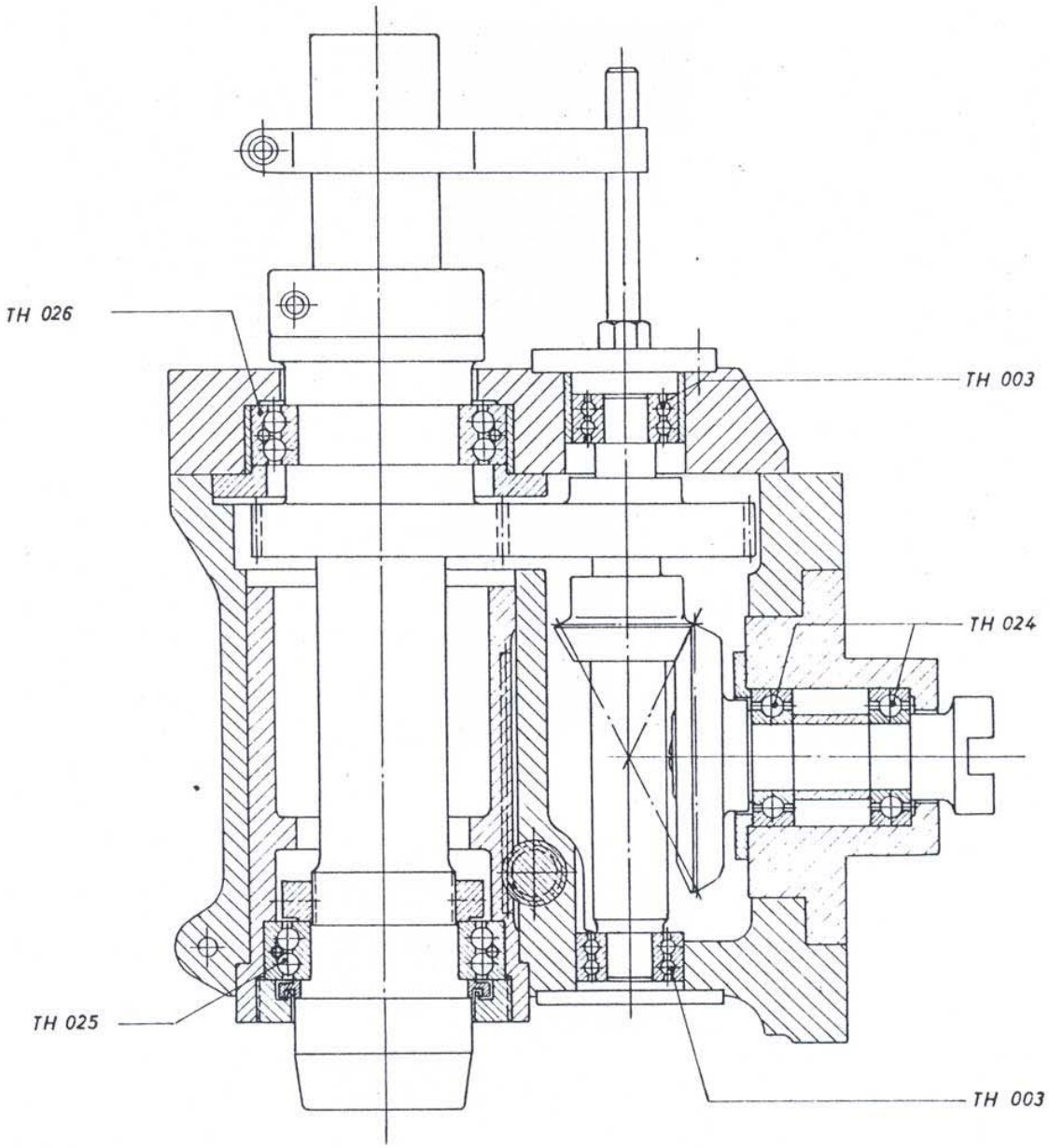

THIEL Ref. No:	Description	Manufacturer	THIEL Ref. No:	Description	Manufacturer
TH 0 24	Ball Bearing 6205 DIN 625	SKF Schweinfurt	TH 0 26	Ball Bearing UK 60	UKF Berlin
TH 0 03	" " 3203 DIN 628	" "	TH 0 25	" " UK 55	" "

Replacement Parts for THIEL-DUPLEX-158

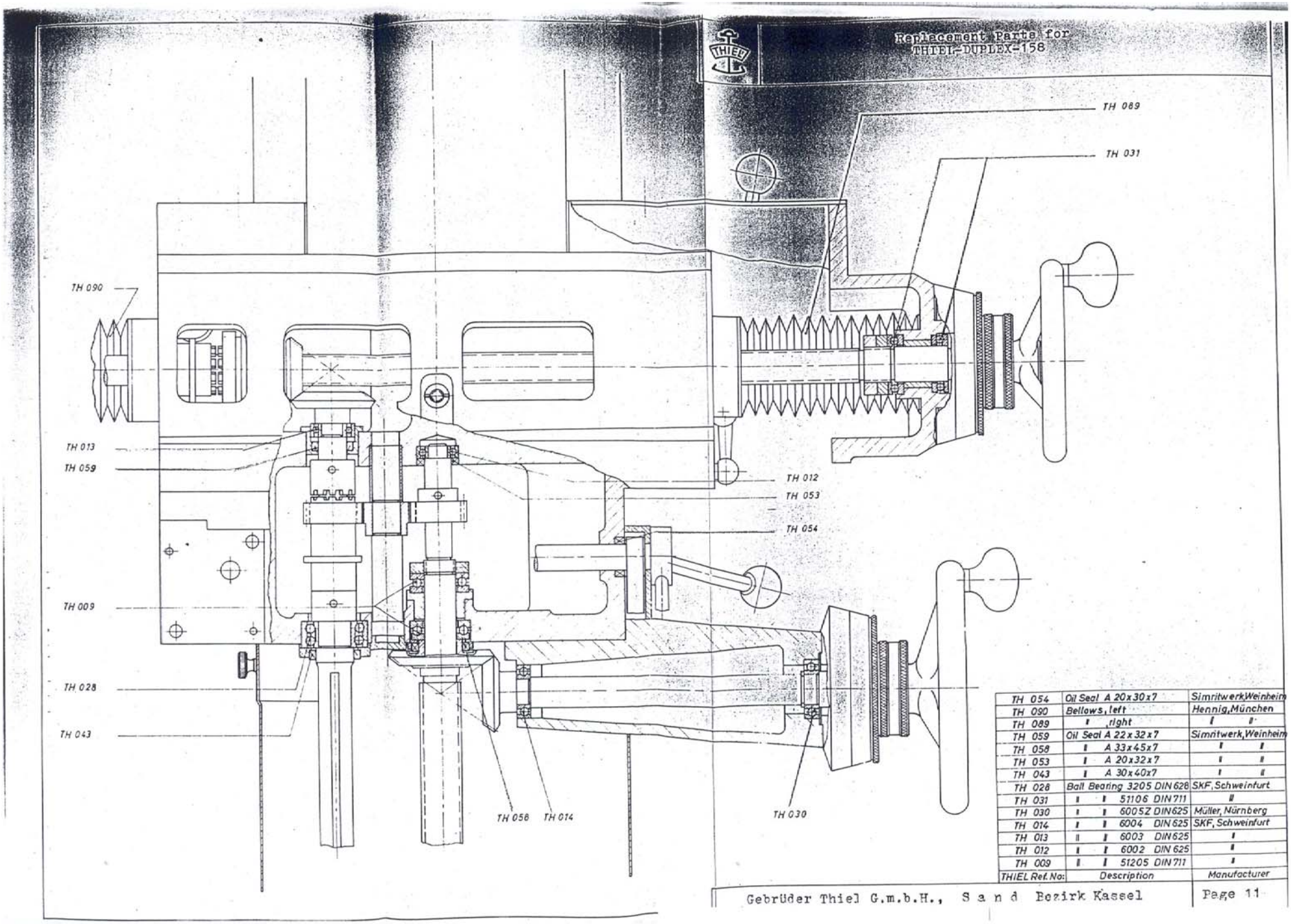

THIEL Ref. No:	Description	Manufacturer
TH 054	Oil Seal A 20x30x7	Simritwerk Weinheim
TH 090	Bellows, left	Hennig, München
TH 089	" , right	" "
TH 059	Oil Seal A 22x32x7	Simritwerk, Weinheim
TH 058	" A 33x45x7	" "
TH 053	" A 20x32x7	" "
TH 043	" A 30x40x7	" "
TH 028	Ball Bearing 3205 DIN 628	SKF, Schweinfurt
TH 031	" " 51106 DIN 711	"
TH 030	" " 6005Z DIN 625	Müller, Nürnberg
TH 014	" " 6004 DIN 625	SKF, Schweinfurt
TH 013	" " 6003 DIN 625	"
TH 012	" " 6002 DIN 625	"
TH 009	" " 51205 DIN 711	"

Replacement Parts for
THIEL-DUPLEX-158
Slotting Head (Attachment 4)

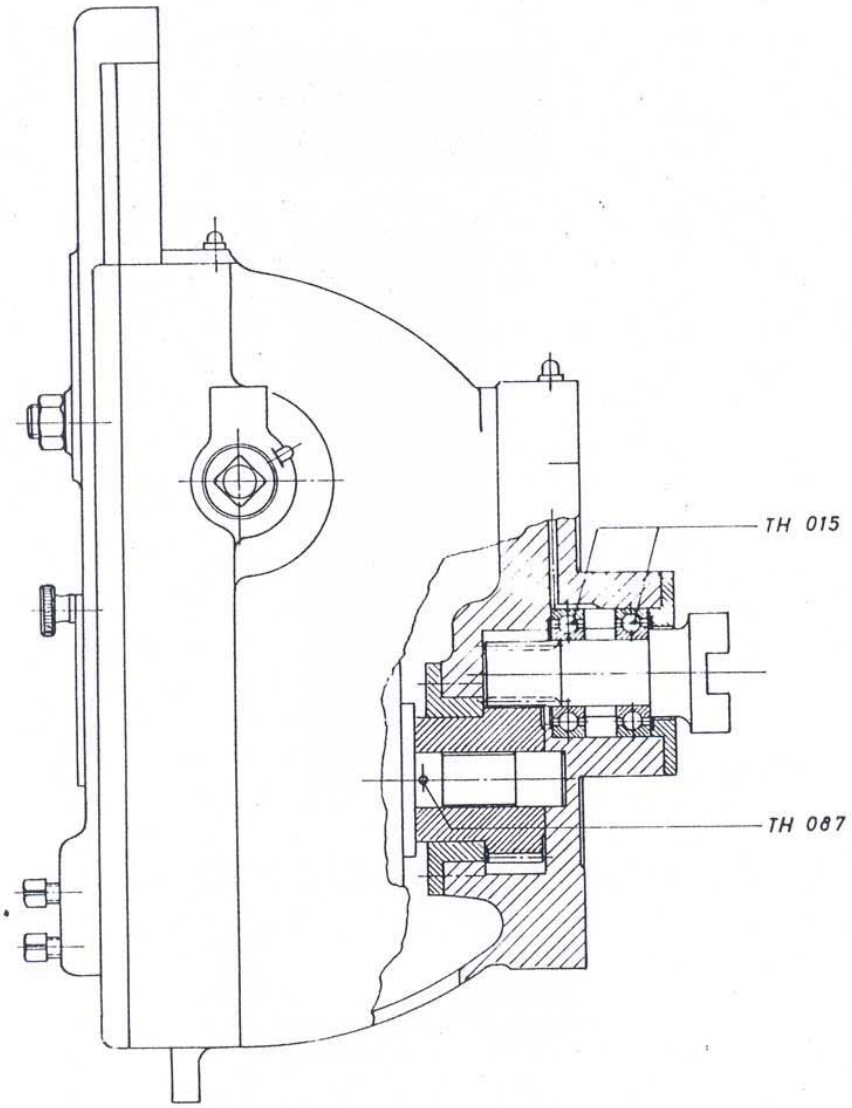

THIEL Ref. No	Description	Manufacturer
TH 0 87	Shear pin 3,5 °	Junghans, Schramberg
TH 0 15	Ball Bearing 6005 DIN625	SKF Schweinfurt

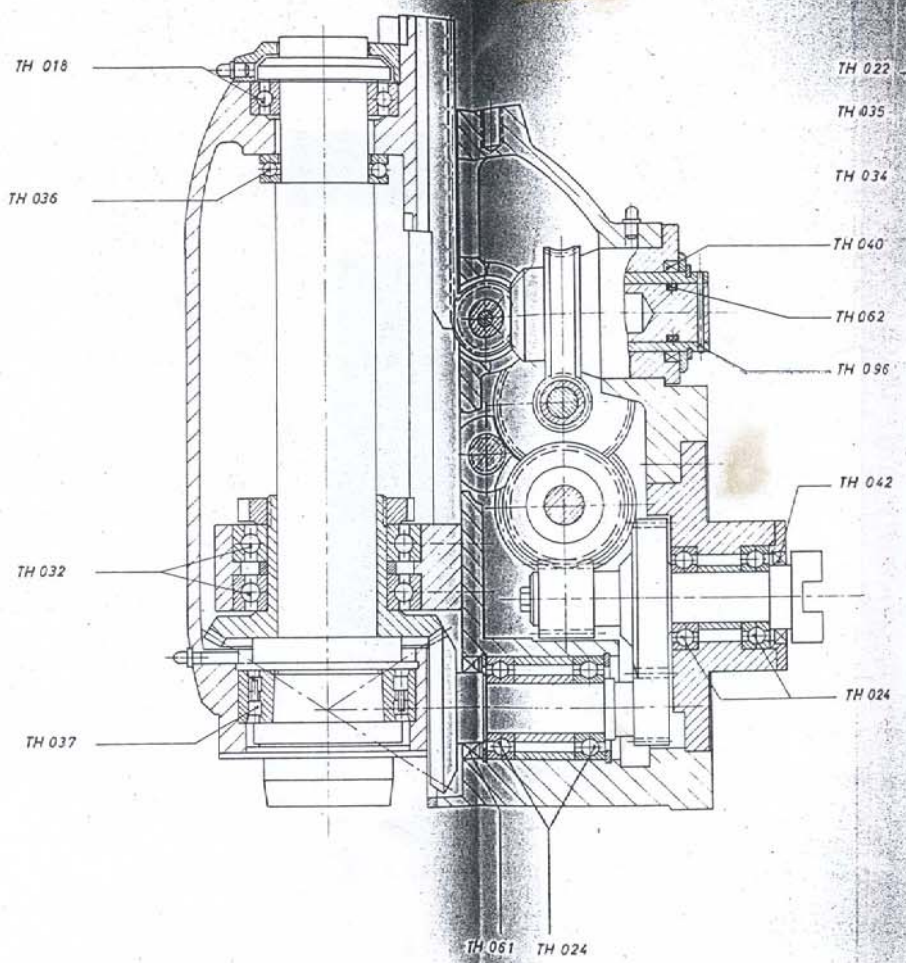

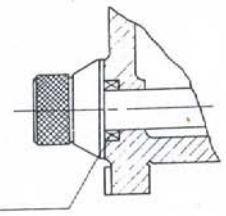

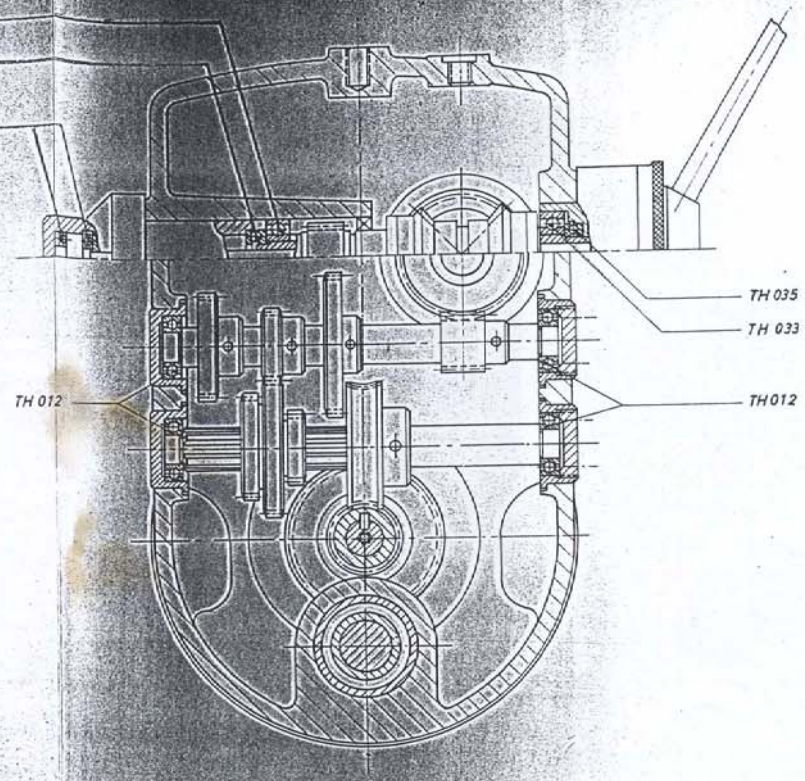

THIEL Ref. No:	Description	Manufacturer	THIEL Ref. No:	Description	Manufacturer
TH 042	Oil Seal A 32x45x7	Simritwerk, Weinheim			
TH 040	" A 40x52x7	" "			
TH 037	Roller Bearing NN 3011 XKMSP	SKF Schweinfurt			
TH 036	Ball Bearing 51109 DIN 711	"			
TH 035	" 51102 DIN 711	"			
TH 034	" 51100 DIN 711	"			
TH 033	" ALN 17	RIV Frankfurt			
TH 032	" 6012 DIN 625	SKF Schweinfurt			
TH 024	" 6205 DIN 625	"	TH 096	Shear pin 2,0 ϕ	Junghans, Schramberg
TH 022	" 6203 DIN 625	"	TH 062	Oil Seal Simrit-O 24,2x3,0	Simritwerk, Weinheim
TH 018	" 6009 DIN 625	"	TH 061	A 36x52x9	" "
TH 012	" 6002 DIN 625	"	TH 054	A 20x30x7	" "

Replacement Parts for
THIEL-DUPLEX-158
High-Speed Drilling Head (Attachment 8)

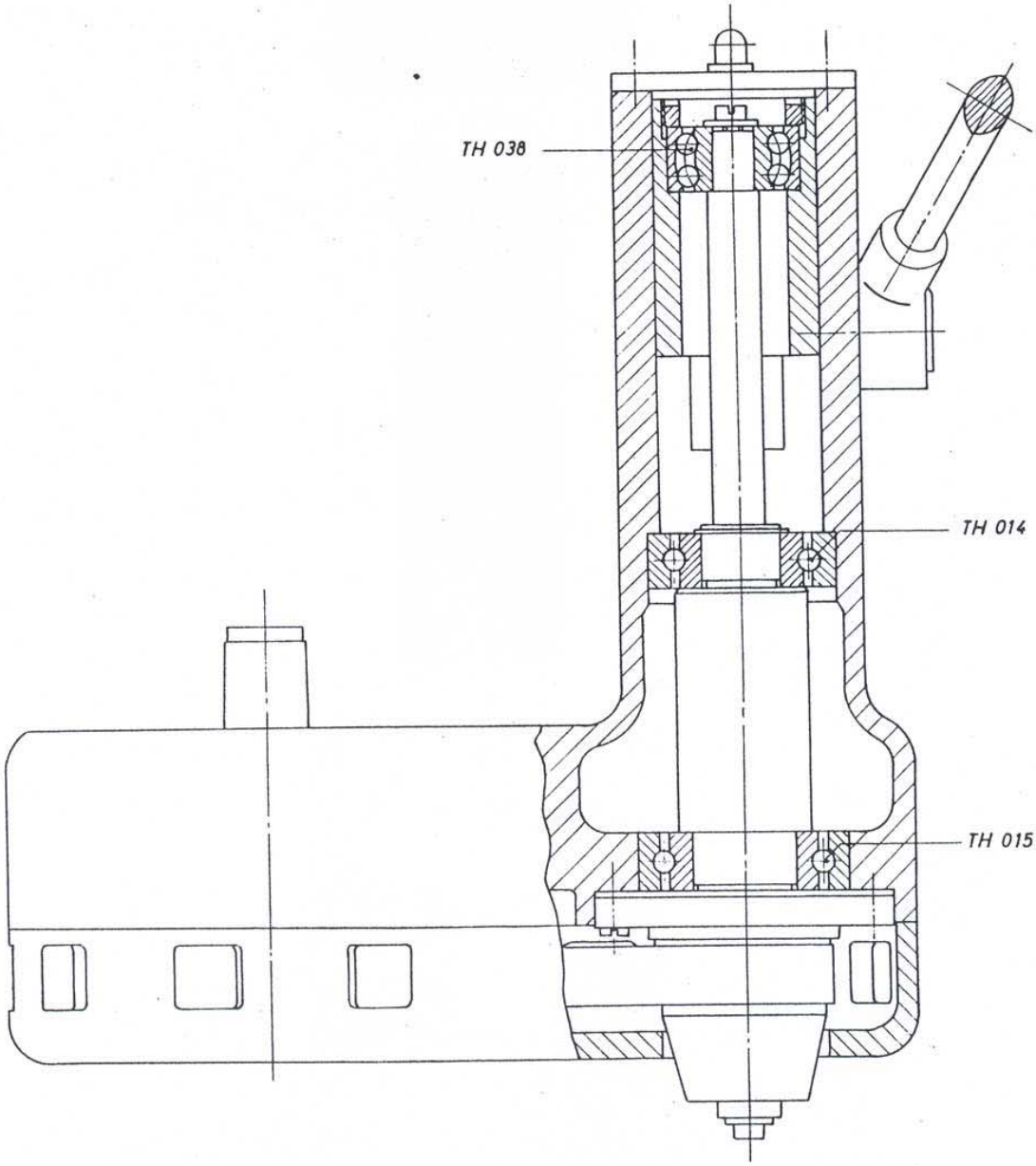

THIEL Ref. No:	Description	Manufacturer	THIEL Ref. No:	Description	Manufacturer
TH 0 15	Ball Bearing 6005 DIN 625	SKF Schweinfurt			
TH 0 14	" " 6004 DIN 625	"	TH 0 38	Ball Bearing 2200 DIN 630	SKF Schweinfurt

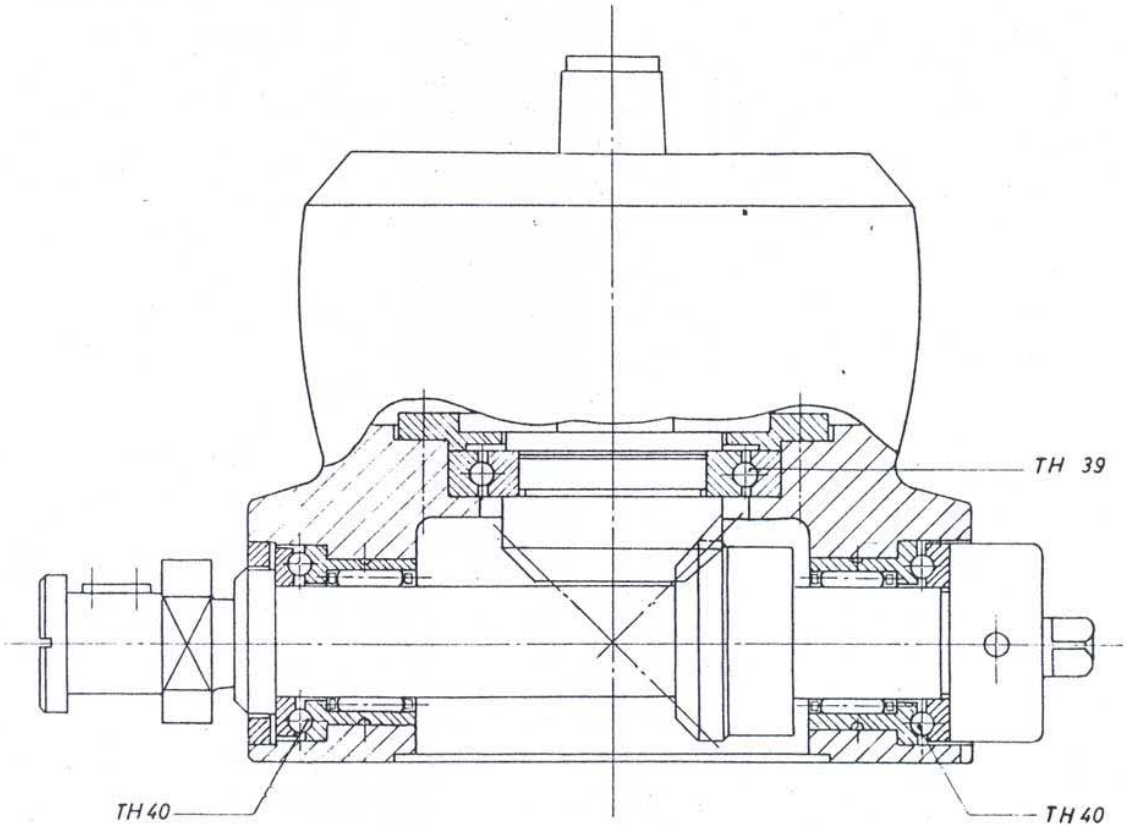

TH 0 40	Comb.Needle.-Ball Bearing NKX25	Schaeffler, Herzogenaurach		
TH 0 39	Ball Bearing 16008 DIN 625	SKF, Schweinfurt		
THIEL Ref. No:	Description	Manufacturer		