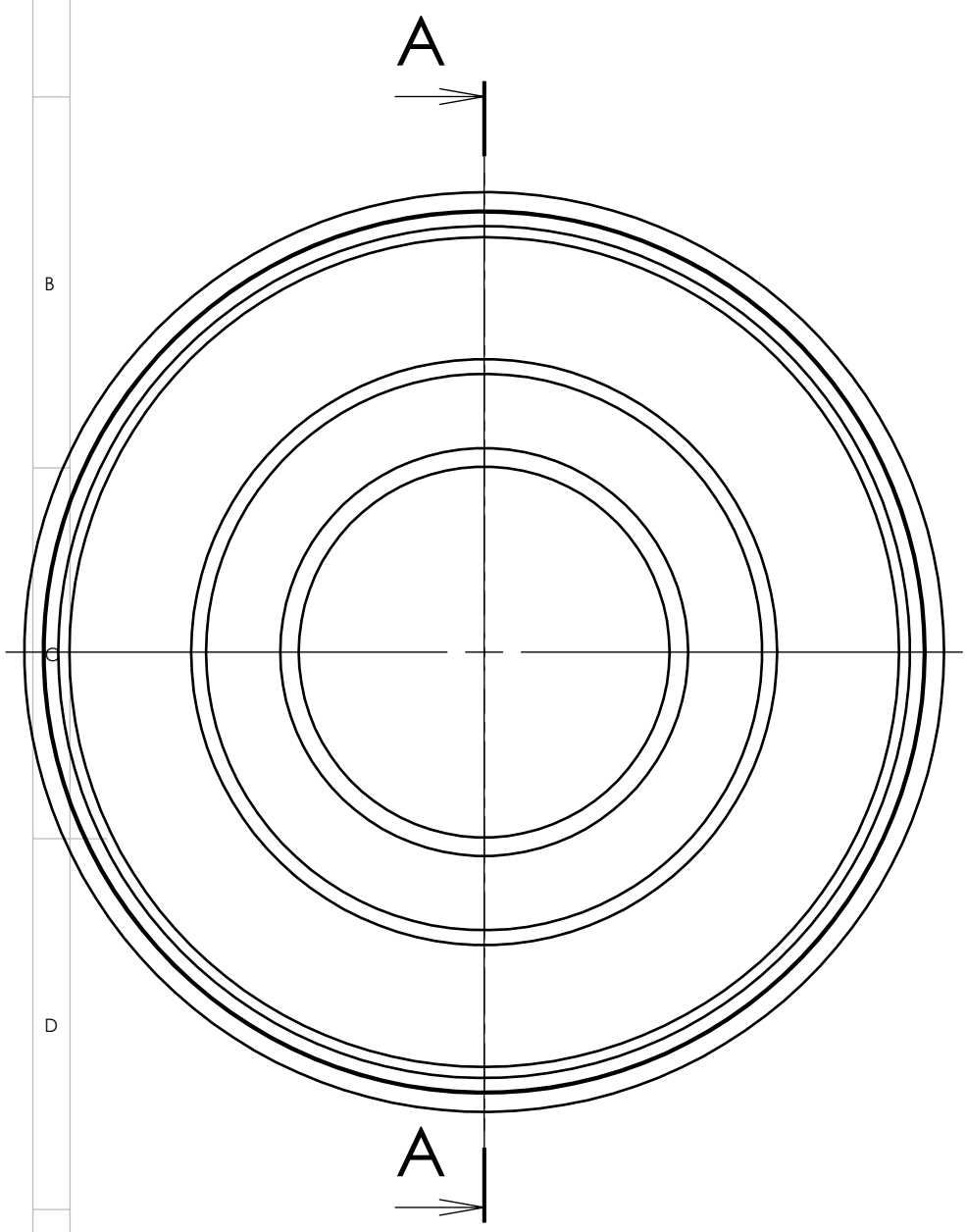

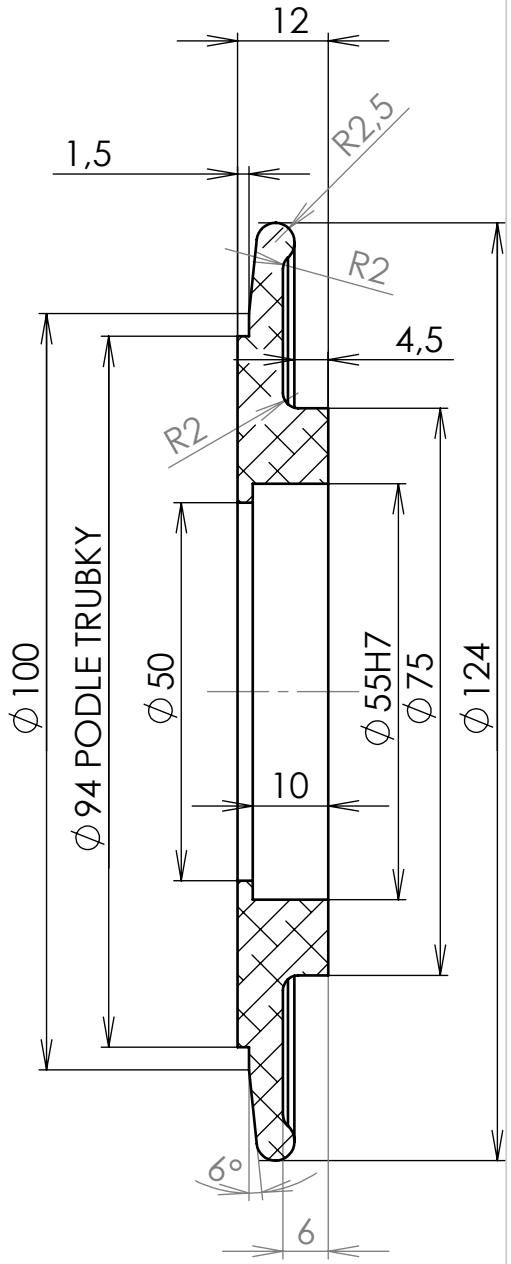

ŘEZ A-A

TOLERATION ISO 8015		MATERIAL AW-6082 T6	
PRECISION ISO 2768 m K		-	
PROJECTION	REVISION No.		SCALE 1:1
		WEIGHT 169.07 g	
DESIGNED BY ROZPORKA	DATE 10.12.2016		
ATELIER TECHNIK		PART NAME -	
		DRAWING NUMBER D015-9	

Copyright (C) Atelier Technik s.r.o.